HDR | ONE COMPANY *Many Solutions*℠

Technical Memorandum #4
Pump Station Evaluation

To: David Pergrin, Harford County Division of Water & Sewer Chris Skaggs, Northeast Maryland Waste Disposal Authority	
From: Scott Davis / Bill Lai, HDR	Project: Pumping of Reclaimed Water from Joppatowne WWTP to the NMWDA Waste to Energy Facility
CC:	
Date: January 30th, 2008	Job No: 147-67242

RE: PUMP STATION ALTERNATIVE REVIEW AND RECOMMENDATION

1. Objective

As part of the feasibility study regarding re-using effluent from the Joppatowne Wastewater Treatment Plant (WWTP), potential pump station alternatives were evaluated to determine the best conceptual design for pumping effluent from the WWTP to the proposed Waste-to-Energy Facility (WTE). The WTE Facility is located 3-1/2 miles from the Joppatowne WWTP and is within the Aberdeen Proving Ground area.

This technical memo presents results of HDR's evaluation of pump station alternatives at the WWTP. In Tech. Memo No. 1, the design criteria for the pump station and pump station alternatives were discussed and outlined. Each of the alternatives is more fully described herein, with a comparison based on project design issues, such as constructability, operation and maintenance, WWTP impact, and environmental impacts. Construction costs are also discussed and evaluated. As noted in Tech Memo No. 1, the approximately 3-1/2 mile force main will be designed using a 10-inch diameter high density polyethylene (HDPE) line,

In Tech Memo No. 1, three alternatives were briefly discussed for consideration. They were:

- Alternative 1 – retrofitting the existing Chlorine building
- Alternative 2 – installing a new pre-engineered pump station facility
- Alternative 3 – constructing a wet well off the existing chlorine contact tank.

These alternatives will be discussed in much greater detail in this technical memorandum.

2. WWTP description

The WWTP is located off of Shore Drive in the northwestern part of Joppatowne, behind a shopping complex off of Rt. 40. Adjacent to the WWTP site is a post office and supermarket. An aerial plan of the site is shown in Figure No. 1. Photographs of the WWTP site are shown in Attachment A.

The WWTP currently has screening and grit removal, followed by an equalization tank. Flow from the equalization tank is directed to three reactor/clarifiers. The clarifier supernatant is directed to the chlorine contact tank area located in the western corner of the site (Attachment A – Picture 3). Contact time is achieved by detaining the flow within an open contact tank with corridors, and within an older secondary chamber underneath the chlorine building (Attachment A – Picture 4). Dechlorination is provided at the end of the below grade chlorine contact tank prior to discharge to the outfall. An effluent weir maintains the water level in the older contact tank. Plan, flow diagram, and hydraulic profile of the WWTP are shown in Figures 2, 3, and 4, respectively.

The existing electrical one-line diagram is shown in Figure 5. A brief electrical load evaluation was performed, and the observations are shown in the field report shown in Attachment B. This report will be referred to later in this memorandum.

It should be noted that the County may be required to implement an Enhanced Nutrient Removal (ENR) plan as part of the Chesapeake Bay initiative to improve the water quality in the Bay. The ENR plan goal would be to upgrade the WWTP to reduce effluent nitrogen and phosphorus concentrations to 4 mg/l and 0.1 mg/l, respectively. The preliminary options developed by the County for ENR upgrade are shown in Attachment D. Examination of the ENR conceptual proposals indicate that the improvements would be based on modifying the two large reactor tanks and adding tertiary filters or membranes. One of the options utilizes UV disinfection, which will be addressed below. Discussions with the County indicate that the future plans for this upgrade have not been decided upon, and will be considered along with other County WWTPs where the effluent flow is much greater than the Joppatowne WWTP flow. The County has requested that the effluent pump station alternatives must take into consideration these potential ENR plans. Consideration was mainly given to the land space requirements that will be required under the various ENR upgrade alternatives.

3. Effluent Flow and Quality

Monthly historical effluent data from December 2005 through October 2007 is shown in Attachment C and summarized in Table 1 below. Additional effluent sampling performed in

November 2007 is provided in Table 2. The additional sampling includes parameters that may impact the WTE and may require additional pre-treatment.

Table 1: Historical Joppatowne Monthly WWTP Effluent Concentration

Parameter	Unit	Average Month	Max Month Average
TSS	mg/L	3.3	6.9
BOD	mg/L	6.6	11.4
Total Phosphorus	mg/L	0.7	1.4
Ortho-phosphorus	mg/L	0.4	1.1
TKN	mg/L	3.1	9.2
Ammonia as N	mg/L	1.3	5.6
Nitrate and Nitrite as N	mg/L	3.4	10.1
Organic Nitrogen	mg/L	2.0	5.7
Total Nitrogen	mg/L	6.6	11.9
Fecal Coliform	MPN	6	36
Alkalinity	mg/L	81	118

The effluent flow from the WWTP appears to consistently achieve good effluent quality from the standpoint of solids and nutrients. Monthly TSS averages less than 4 mg/L. Effluent ammonia averages 1.3 mg/L per month. Ammonia will likely concentrate in the WTE cooling tower blowdown, although some may evaporate. Alkalinity and hardness are both low to moderate and should not require additional pre-treatment at the WTE.

Table 2: Requested Sample Analysis - Joppatowne WWTP Effluent Grab Samples Nov. 2007

Parameter	Unit	Average	Max
Ammonia as N	mg/L	0.20	0.36
Alkalinity	mg/L	81	92
Chloride	mg/L	77	90
Hardness	mg/L	79	84
Ortho-phosphorus	mg/L	0.8	1.3
Conductivity	uS/cm	482	495
Sulfate	mg/L	34.4	37.5
TDS	mg/L	283	302
Turbidity	NTU	1.3	2.7
pH		7.1	7.5

The pH range for the WTE cooling tower water is 5 to 8, although ideally the range is 7.0 to 7.3. As seen in Table 2, the plant effluent pH averaged 7.1 during the two weeks sampling period,

with a max of 7.5. This pH range is consistent with the historical data and well within the required range for the WTE.

The service area appears to be mostly residential, with a small commercial constituent, with no industrial flow. The consistency of the influent source and the operation and maintenance of the plant may be reasons why the effluent is relatively clean.

4. Pump Station Criteria

As noted in Tech. Memo No. 1, the effluent reuse system will be designed to transfer a maximum of 1.2 MGD, or approx. 850 gpm, from the WWTP to the proposed WTE. The force main will be 10-inch diameter, HDPE main. With this information, pump and motor sizing can be estimated, to generally understand the physical size and electric load required for the pump facility. After the pump and motor size have been determined, pump station criteria should be established so that the alternatives all meet common design requirements and goals for the operation and maintenance of the pump station. Once the alternatives are conceptually outlined, the advantages and disadvantages between the pump station alternatives can be discussed and then evaluated and weighed for a final selection.

4.1. Pump and motor sizing

The pump design is dependant on establishing basic flow and head loss information, from which a pump can be selected. The information required is as follows:

a. Flow rate – pump station will be sized to transfer a maximum flow of 1.2 MGD, or approx. 850 gpm, based on Joppatowne WWTP flow data from January 2000 – July 2007.
b. Pipe diameter – 10-inch
c. Force main distance – the effluent will need to be pumped approximately 3.5 miles
d. Static head difference – There is an elevation increase of 41 ft from the WWTP to the WTE. The WWTP is located at approx. 12 to 13 ft above sea level, and the WTE is at 53 ft. In addition, there will be increased static head if there is a holding tank at the WTE. For instance, a 500,000 gal storage tank with a 50 ft diameter would be approximately 35 ft tall, with freeboard. This would increase the static head on the pump from 41 ft to 76 ft. There are also some minor hills along the two potential routes, which are described in TM #5 and are shown in the route profiles.
e. Total dynamic head – Based on the above noted information, the total dynamic head that the pump will need overcome is approx. 165 feet.
f. Motor horsepower – Based on the above noted information, depending upon efficiency of the pump style chosen, the motor horsepower would be 50-100HP.

4.2. Pump selection

Several types of centrifugal pumps can be used to achieve the purpose of pumping effluent water under the above conditions. The pump selection is influenced on the installation parameters regarding whether the pumps and motor will be; submerged; in a pre-engineered pump station; or mounted in a modified existing structure. The three alternatives represent different situations for establishing a pump station near the end of the treatment process at the WWTP, and each of those alternatives may dictate a different type of pump to function within the respective alternative plan. The different pump systems are discussed below, with catalog cut sheets of the potential pumps in Attachment E, along with the pump system curve.

a. A vertical turbine pump, with its pump bowl immersed in the well and its motor mounted above the pump at the operating level, at grade, could be installed in an existing or new wet well. A pump that could operate under this hydraulic condition is a 7-stage, 12DKH by Weir Floway, with a 50 hp motor, 8-inch column, and 12-inch discharge at the head. The discharge head and motor is approximately 5 feet tall, from base plate to top of motor. This is the most efficient type pump in this application, since the pump is not designed to pass a solid.
b. The pre-packaged station would have its own wet well with the pumps mounted in a dry well or the wet well. Discussions with the County indicated that Portacon has a pump station design that has been approved and has been operated successfully within the County, using Smith and Loveless pumps. Smith and Loveless utilize a vacuum primed pump system, with its pump and motor at grade and a suction line in to the wet well. Under this alternative, the S&L pump that would operate under the above flow characteristics is an 8D4V, with a 100hp motor, 8-inch suction, and 8-inch discharge.
c. A submersible pump, with its motor and pump submerged in the wet well, could be used in almost any arrangement. A pump that would meet the hydraulic characteristics mentioned above would be an AFP 1002 pump by ABS. This pump would have an 84.5 hp motor, with 4-inch discharge line. The pump and motor are about 5 feet tall, and about 20 inches wide.

4.3. Pump station conceptual design

Regardless of the alternatives mentioned above, each pump station should have some common features to allow for proper operation and maintenance of the pump system. These are as follows:

a. The pump station will have two pumps, one operating and one on standby. Each pump will be capable of handling the maximum flow of 850gpm.

b. Each alternative should have a wet well from which the pump suction will draw, with an ultrasonic level sensor for level monitoring and pump control. Redundant float switches should be used, with the low level switch hard wired to the pumps as protection from ultrasonic sensor failure.
c. Variable frequency drives, to permit a more efficient pump operation, will be included in each alternative.
d. Valve vault or enclosure for the discharge gate and check valves, to allow for pump maintenance while the station remains in operation, will also be included in each alternative. Schematics of the pump station flow components are shown in Attachment F.
e. Electrical motor control center – Power feeds to the pump motors will require a new or existing motor control center to connect to. As noted in the field report in Attachment B, a new electric service will be required to feed the new pump station. The new electrical switchgear and motor control panel will be place in the new pump station.
f. Emergency power will be needed to maintain operation during a power outage. As noted in the field report in Attachment B, a new generator will be required to provide backup power for the pump station. The generator will be mounted in an outdoor enclosure.
g. Instrumentation and telemetry will be required to monitor the operation of the pump station and record the amount of effluent transported to the WTE. Level information from the receiving tank at the WTE will be needed to ensure that the pump rate is controlled to not overflow the storage tank.
h. It is recommended that the electrical equipment, VFDs, and controls be housed in a dry area to facilitate operation and maintenance. Where possible, the pump motor should be in an enclosure to facilitate access to the motor for maintenance.

4.4. Key pump station design issues -

Key issues for the pump station design, relative to function and location, are as follows:

a. Ability for the contact tank effluent to flow by gravity from the chlorine contact tank to the pump station. The design should not require the effluent flow to be pumped twice and, if at all possible, should not have valving.
b. Achieving the chlorine contact time requirement of 30 minutes at peak flow, even though the reused effluent is not going to the outfall. For this evaluation, the design basis will include maintaining the required chlorine contact time up to the pump suction. This requirement dictates a calculation of the capacity of the existing contact tank, specifically if the second contact tank is converted to a pump station or if it must be bypassed to achieve gravity flow to a new pump station, will require increasing the capacity of the contact tank. This could be achieved by increasing the height of the walls or by adding

additional channels to the newer contact tank. The existing chlorine contact tank has a volume of approximately 57,996 gallons. At a peak flow of 3.2 mgd, this provides a holding time of 26.1 minutes. To achieve the 30 minutes of contact time, the tank walls would have to be increased. The tank walls can be increased at a maximum to approximately 5 feet, as per the Hydraulic Profile (Figure 4), the weir and second clarifier elevation of 21.9 and water elevation of 17.2.

c. Ability for the treated effluent/stored water to flow by gravity to the outfall in the event of high flow, when either the WTE tank is at a high level and doesn't require cooling water, or the flow into the pump station wet well is greater than the pump capacity.
d. Ability to provide dechlorination of the treated effluent/stored water prior to discharge via the outfall. The older contact tank currently has the plant's primary dechlorination point, but there is a secondary dechlorination point in the newer chlorine contact tank. The dechlorination chemical feed line, which travels under the access road, is currently out of service and requires replacement.
e. The new pump station must not adversely impact future ENR design, even though the plans for ENR are only conceptual. The County anticipates that denitrification filters will be installed west of the utility water building, so this area is not available for a new pump station.
f. Discussions with County personnel indicate that ultraviolet disinfection is being considered to replace chlorination. This appears to be a viable option that would eliminate having a hazardous chemical stored on-site, and would not require dechlorination. The pump station options will consider this possible upgrade as well, including where the effluent sample point would be and how to handle possible bacteria growth in the pump station since there is no residual chlorine present with UV disinfection.

5. Pump Station Alternative Designs

On the basis of the criteria established above, the options for installing an effluent reuse pump station are discussed below.

a. Alternative No. 1 – Retrofitting the chlorine building. The building has a sub-grade 19,300 gallon tank under its operating floor that currently serves to detain the process flow for chlorine contact time.
b. Alternative No. 2 – New pre-engineered pump station and wet well. A pre-engineered, pre-package pump station and 3,000 gallon wet well could be installed to accept flow downstream of the chlorine contact tank.
c. Alternative No. 3 – Wet well established inside the chlorine contact tank.

Each alternative is shown in Attachment F and discussed in greater detail below.

5.1. Pump Station Alternative 1 – Chlorine Building

General Description: Figure F-1 shows the basic layout of this pump station alternative. The chlorination building below grade tank would be used as the wet well for the pumps. Vertical pumps or submersible pumps could be used for this alternative. With vertical pumps, the motors would be mounted on the ground floor level above the wet well.

Modifications Required: To facilitate installing the pumps in this building, the following modifications would be required:

- The chlorination/dechlorination equipment and storage would have to be consolidated to allow more room for the new pumps (Attachment A – Picture 7). One room would be dedicated for the pumps, motors, and electrical equipment. Plant conversion from gas to liquid disinfectants (hypochlorite and bisulfite), which is under consideration, would allow a larger portion of the building to be utilized for the pumps and controls. The building would have to be reconstructed for the installation of the pumps and electrical equipment. A hoist or ceiling hatch would be required to facilitate maintenance to the pumps.
- Consideration must be given to the flow scheme of water in this wet well tank. Due to the preference of pumped water being chlorinated, the pumps will extract water from the wet well prior to dechlorination. In the event the WTE facility no longer demands water or the pump capacities are exceeded, then the water must be dechlorinated and flow to the outfall, as it is in the existing conditions. This can be achieved by the construction of a baffle wall just before the dechlorination point, where if water overtops the baffle wall, the dechlorination injection would be activated before flowing to the outfall.

Impact to WWTP:

- Under this alternative, the chlorine contact tank and remaining space in the lower level of the chlorine building meets the necessary 30 minute contact time requirements.
- If the existing contact tank was converted to an ultraviolet disinfection treatment facility, then the chlorination building could be retrofitted for effluent pumping with less space limitations. A room in the building could be retrofitted to contain UV electric distribution and controls. Dechlorination would be eliminated as well.
- ENR upgrade alternative no. 1 consists of the installation of denitrification filters and a methanol feed system in place of the chlorine contact tank, and retrofitting the chlorine building for ultraviolet disinfection. It would have to be further evaluated to determine if UV disinfection and the effluent reuse pumps could both be installed in the chlorine building.

Design details (Civil, structural and electrical):

- Beside the pump station force main, no other pipe work is required on the site.
- The building structure would have to be analyzed for structural sufficiency to support the new equipment. The building structure could be reinforced if required.
- Electrical – A new electrical service to the chlorine building would need to be installed for the new load. Based on the size of the effluent pumps and motors, the electrical load is 160 kVA. An outdoor emergency generator would be needed as well.
- Instrumentation and telemetry would be necessary to control and monitor the operation of the pump station. The instrumentation would feed into the plant SCADA system, and receive data from the WTE storage tank. The instrumentation would have the following goals:
    - Control the effluent pump operation based on wet well level.
    - Control the effluent pump operation based on storage tank level at the WTE
    - Monitor and record the flow rate to quantify how much effluent was being pumped to the WTE
    - Monitor the turbidity of the effluent water, which would correlate to water quality
    - Determine when effluent flow was reaching the outfall.

Cost Impact :

The estimated cost for the construction of the pump station is approximately $2,215,000. The breakdown for this cost is shown in Attachment G. A major factor playing into this construction estimate was the amount of retrofit work and electrical reconfiguration work necessary.

5.2. Pump Station Alternative 2 – Pre Engineered Pump Station

General Description: Figure F-3 shows the basic layout of this pump station alternative. A new above grade pump station and below-grade 3,000 gallon wet well could be constructed on the site, west of the existing chlorine contact tank, in the stormwater management area (Attachment A – Picture 8). The above grade structure would be approximately 12’ x 18’, with an outdoor emergency generator. Either vertical turbine, submersible or vacuum primed pumps could be used with this alternative. Vertical turbine pumps would require a custom built pump station. The pump station will require an inlet line from the chlorine contact tank and an overflow line to the chlorine building for cases of high flow.

Modifications Required: To facilitate installing the pre-engineered pump station, the following modifications would be required:

- The chlorine contact tank weir box would have to be modified to feed to the pump station wet well.

- An overflow line from the new wet well to the chlorination building must be constructed to ensure that for flows beyond the pump capacity, the flow could be discharged out to the outfall with dechlorination.
- The grading around the pump station would be modified and a new stormwater area constructed.

Impact to WWTP:

- Without the chlorination building contact time, the capacity of the chlorine contact tank must be increased to allow for the full contact time required. This could be achieved by raising all the walls of the contact tank 1'-8". A review of the hydraulic profile indicates that this increase is possible and would not impact flow through this area of the plant.
- The older chlorine contact tank would remain in service to receive flow from the wet well and for dechlorination. It may be possible, during detailed design, to provide dechlorination at the new wet well, which will allow decommissioning of the below-grade chlorination building.
- If the existing contact tank was converted to an ultraviolet disinfection treatment facility, the chlorination building would be out-of-service.
- ENR upgrade alternative no. 1 consists of the installation of denitrification filters and a methanol feed system in place of the chlorine contact tank, and retrofitting the chlorine building for ultraviolet disinfection. The pump station would have to be relocated and additional site piping would be required to have the flow from the UV disinfection treatment be directed to the pump station. The proposed layout does not impact ENR options 2 and 3.

Design details (Civil, structural and electrical):

- Additional site piping would be required, including the pump station force main. Valving and piping to discharge back to chlorine building and to isolate the wet well would be required.
- A new building structure would be constructed to house the pumps, valves, electrical components, and instrumentation on top of the wet well. The top of the wet well and operating floor elevation of the pump station would have to be above the 100 year flood plain, which is close to the fence line approximately at elevation 10.00. A geotechnical evaluation should be conducted to determine the foundation conditions. It is assumed that some sub-grade work will be required, to ensure that proper foundation is established for the pump station.
- As noted earlier, the walls of the chlorine contact tank would have to be raised by 1 foot 8 inches to increase the contact time in the tank.

- This area is currently the stormwater treatment area and has shallow water discharge pipes. A new stormwater collection area would be required, likely just outside the fenceline to the west.
- Electrical – A new electrical service to the pump station would have to be installed. An outdoor emergency generator would be required.
- Instrumentation and telemetry would be necessary to control and monitor the operation of the pump station. The instrumentation would feed into the plant SCADA system, and receive data from the WTE storage tank. The instrumentation would have the following goals:
    - Control the effluent pump operation based on wet well level.
    - Control the effluent pump operation based on storage tank level at the WTE
    - Monitor and record the flow rate to quantify how much effluent was being pumped to the WTE
    - Monitor the turbidity of the effluent water, which would correlate to water quality
    - Determine when effluent flow was reaching the outfall.

Cost Impact :

The estimated cost for the construction of the pump station is approximately $1,660,000. The breakdown for this cost is shown in Attachment G. Major factors effecting the price in this alternative is a large amount of site work and reconfiguration of the stormwater management system in this area.

5.3. Pump Station Alternative 3 – Contact Tank

General Description: Figure F-5 shows the basic layout of this pump station alternative. The new effluent pumps would be installed into the chlorine contact tank, in the channel at the lowest point in the tank (Attachment A – Picture 9). Submersible pumps could be installed under this alternative. The discharge lines from the pumps would be installed in a valve vault. The VFDs, electrical components and controls would be situated in a room in the existing chlorination building.

Modifications Required: To facilitate installing the pumps in the tank, the following modifications would be required:

- The chlorination/dechlorination equipment and storage in the utility water building would have to be consolidated to allow more room for the new electrical equipment. One room would be dedicated for the electrical equipment.
- A weir gate would also be needed in the contact tank, upstream and downstream of the submersible pumps, to ensure that the tank elevation was maintained.

- A platform would need to be constructed atop the contact tank to facilitate lifting the pumps out of the tank.
- A valve vault or housing will be required for the valves to be operated and maintained.

Impact to WWTP:

- Without the chlorination contact time from the tank below the utility water building, the capacity of the newer chlorine contact tank must be increased to allow for the full contact time required. This could be achieved by raising all the walls of the contact tank 2'-2". A review of the hydraulic profile indicates that this increase is possible and would not impact flow through this area of the plant.
- A valve vault would provide an obstruction in the path between the tanks and chlorine building.

Design details (Civil, structural and electrical):

- Beside the pump station valve vault and force main, no other pipe work is required on the site.
- The utility water building structure would have to be analyzed for structural sufficiency to support the new electrical equipment. The building structure could be reinforced if required.
- As noted earlier, the walls of the chlorine contact tank would have to be raised to increase the contact time in the tank.
- Electrical – A new electrical service to the chlorination building would need to be installed for the new load. Based on the size of the pumps and motors, the electrical load is 160 kVA. An outdoor emergency generator would need to be installed.
- Instrumentation and telemetry would be necessary to control and monitor the operation of the pump station. The instrumentation would feed into the plant SCADA system, and receive data from the WTE storage tank. The instrumentation would have the following goals:
    - Control the effluent pump operation based on wet well level.
    - Control the effluent pump operation based on storage tank level at the WTE
    - Monitor and record the flow rate to quantify how much effluent was being pumped to the WTE
    - Monitor the turbidity of the effluent water, which would correlate to water quality
    - Determine when effluent flow was reaching the outfall.

Cost Impact :

The estimated cost for the construction of the pump station is approximately $1,920,000. The breakdown for this cost is shown in Attachment G. This alternative requires some site work and

various structural tasks. There is also some retrofit work that is necessary to be done to the existing chlorine contact tank.

6. Pump Station Alternative Analysis

The pump station options are compared using the criteria in Table 3 below. Force main routing inside the WWTP property line will be identical for each option, so this is not counted as a factor. Based on site review, the force main will follow the northern perimeter fence east to the chemical delivery access gate, which is off of Joppa Farm Road. The route will be discussed in Technical Memorandum 5, Final Route Analysis. There are four categories, with potential impact factors identified for each category.

Table 3: Pump Station Alternative Ranking Criteria

Evaluation Factor	Description
WWTP Impact	
Wastewater Treatment	Impact on disinfection process
Operations	Impact on plant operations
Electrical Load	Impact on facility electrical distribution system
Future ENR Upgrade	Impact on future ENR work
Pump Station Operation and Maintenance	
Pump Access	Access to pump and motor for maintenance
Electrical and Controls Access	Access to MCC and control equipment.
Pump maintenance requirements	Maintenance typically required to ensure pump operation
Pump control	Ability to control flow rate and level.
Overflow control	Control of overflow to outfall.
Environmental Impact and Permitting	
Wetlands and Vernal Pools	Impact on wetlands
100-yr Flood Plain	Impact on 100-yr Flood Plain
Permitting	Amount of Permitting required
Constructability	
Mechanical	Installation of mechanical and instrumentation equipment.
Civil and site work	Civil and site work required for alternative.
Construction Duration	Estimated time to complete project.
Structural work	Structural work required for alternative.
Retrofit work	Retrofit work required for alternative.

Cost is calculated separately and is not included in the evaluation matrix. Most of the variables above, such as construction complexity, will impact cost, which would lead to cost being measured twice in the matrix.

The ranking of the various potential pump station alternatives is achieved by evaluating the alternatives against the impact factors within each of the four evaluation categories. A score from 1 to 10, with 10 being the lowest impact and the alterative that provides the greatest benefit for

the County and 1 representing the highest impact or least benefit for the County will be assigned to each impact factor. It is worthy to note that scores of 1 to 10 are given relative to other alternatives, strictly based on comparison, and are not based on any quantitative analysis. The most reasonable and feasible pump station alternative is then identified by the "highest ranking".

6.1. WWTP Operations Impact

The effluent reuse pump station should be designed to work effectively within the WWTP operation, and if possible, should improve WWTP operation and maintenance. The design of the pump station should facilitate construction without affecting the operation and maintenance of the WWTP, and its ability to meet effluent limitations. Pump station location should not impact current operations, such as chemical delivery, or create difficulty in process sampling. Areas reserved for the future ENR plans should be kept available to the extent possible.

6.2. Pump Station Operation and Maintenance Impact

The pump station operation and maintenance requirements should be conducive with the capabilities of the County WWTP personnel.

This ranking shall consider pump accessibility, electrical and controls accessibility, valve operation, and pump and flow control.

6.3. Environmental Impact

Impact on the environment is not a critical factor because the pump station alternatives are within the WWTP property, which is owned by the County. However, the rear area of the WWTP is the lowest grade area within the plant, and has a 100 yr floodplain boundary at its edge. This area also has the plant stormwater treatment area, which must be replaced if the space is used for a new pump station. Wetlands are present outside the western fence line.

6.4. Construction Complexity

Construction complexity will greatly affect the cost for pump station construction, and is therefore an important part of the evaluation. Consideration for construction complexity will include the civil, site and structural work required for each alternative, and the amount of retrofit work needed within the existing plant facilities to install the pump station. The duration estimate is based on understanding of the work that must be performed.

7. Cost Analysis

A basic conceptual cost analysis was done for each of the three pump station alternatives and can be found in Attachment G. The purpose of this estimate was to give a conceptual idea of what each pump station alternative will cost the client. Each pump station alternative was broken down in mechanical, electrical, structural, site improvements, and instrumentation costs. These sections were added together for a subtotal. The subtotal was multiplied by a 10% factor for each of general conditions, overhead, and contractor profit. Additionally, due to the conceptual nature of the estimate, 50% of the subtotal was taken as a contingency factor. Lastly, the final sum was put into 2010 dollars by using an inflation rate of 6% annually.

8. Results of Alternative Ranking

8.1. WWTP Operations Impact

8.1.1. Wastewater Treatment – Impact on disinfection compliance.

Alt. 1 – Chlorine Building: Moderate score (6) due to maintaining chlorine contact time in tank before building. This alternative will require the smallest increase in wall height in the chlorine contact tank.

Alt. 2 – Pre-Engineered Pump Station: Moderate score (5) due to impact to chlorine contact time.

Alt. 3 – Contact Tank: Lowest score (3), due to greatest reduction in disinfection contact time capacity. The pump mounted in the tank will reduce contact time capacity the greatest.

8.1.2. Operations –Impact on plant operations.

Alt. 1 – Chlorine Building: Moderate score (5), due to impact to chlorine building.

Alt. 2 – Pre-Engineered Pump Station: Highest score (7) due to remote location within the plant, at the back corner inside the fence line. Chlorine contact tank height will be affected.

Alt. 3 – Contact Tank: Lowest score (3) due to awkward placement aside chlorine contact tank, can pose potential problem for large machinery.

8.1.3. Electrical Load – Impact on facility electrical distribution system

Alt. 1 – Chlorine Building: Same score for all alternatives (5). Each alternative will require a new electrical service.

Alt. 2 – Pre-Engineered Pump Station: Same score for all alternatives (5). Each alternative will require a new electrical service.

Alt. 3 – Contact Tank: Same score for all alternatives (5). Each alternative will require a new electrical service.

8.1.4. Future ENR – Impact on possible future ENR work.

Alt. 1 – Chlorine Building: Moderate score (5), due to conflict with ENR Alt. 1 in the chlorine building. The effluent reuse pumps will have to be designed along with the UV disinfection system.

Alt. 2 – Pre-Engineered Pump Station: Highest score (7), since the pump station location can be shifted to avoid impacting the future ENR upgrade.

Alt. 3 – Contact Tank: Lowest score (2), since the denitrification filters would be replacing the contact tank under ENR Alt. 1.

Analysis of the three alternatives impacting WWTP Operations is summarized in Table 4 below.

Table 4: WWTP Operations Impact

Alt.	*Wastewater Treatment*	*Operations*	*Electrical Load*	*Future ENR*	*Total Score*
1	6	5	5	5	**21**
2	5	7	5	7	**24**
3	3	3	5	2	**13**

8.2. Pump Station Operation

8.2.1. Pump Access – Access to pump and motor for maintenance.

Alt. 1 – Chlorine Building: Moderate score (5) due to awkwardness and tight fit of pump and motors, maintenance on either would prove to be very difficult.

Alt. 2 – Pre-Engineered Pump Station: Highest possible score (8), best of all options, allows for custom design of space required to properly perform maintenance.

Alt. 3 – Contact Tank: Low score (2), under this alternative, the pumps and their motors will be a tight fit in the enclosure adjacent to the tank, and can be difficult to maintain.

8.2.2. Electrical and Controls access – Access to MCC and control equipment.

Alt. 1 – Chlorine Building Moderately: High score (6), this alternative allows for interior access to control equipment, however, layout will likely be restricted.

Alt. 2 – Pre-Engineered Pump Station: Highest Score (8), control equipment will be situated in the same building as the pump station, with freedom to layout anywhere in building.

Alt. 3 – Contact Tank: Lowest score (3), since the control equipment for this alternative will be in the Chlorine building, away from where the pumps and valves are situated.

8.2.3. Pump maintenance requirements – Maintenance typically required to ensure pump operation.

Alt. 1 – Chlorine Building: Moderate score (5), lifting the pumps inside the existing building will require a monorail or roof hatches.

Alt. 2 – Pre-Engineered Pump Station: Highest score (8), since the motor will be mounted side the building with vertical turbine pumps.

Alt. 3 – Contact Tank: Lowest score (2) – Access to these pumps over the contact tank will be difficult, particularly at a higher elevation than the surrounding grade.

8.2.4. Pump control – Ability to control flow rate and level.

Alt. 1 – Chlorine Building: Moderate score (5), since level in the tank will be dictated based on effluent VFD pumping. Level monitoring can be achieved in the existing tank.

Alt. 2 – Pre-Engineered Pump Station: Highest score (8), the level in the wet well can easily be monitored and controlled through VFD pumping.

Alt. 3 – Contact Tank: Lowest score (2), controlling the level in the tank will be difficult and the low holding volume will result in high flow peaks going to the outfall rather than the WTE.

8.2.5. Overflow control – Control of overflow to outfall.

Alt. 1 – Chlorine Building: Highest score (8), this alternative allows for minimal design of an overflow control system.

Alt. 2 – Pre-Engineered Pump Station: Lower Score (3), under this alternative, additional piping, valves, and/or control equipment will have to be implemented to ensure overflow and wet well isolation is handled adequately.

Alt. 3 – Contact Tank: Moderate Score (5), any overflow would be discharged to the existing tank under the chlorine building.

Analysis of the three alternatives impacting Pump Station Operations is summarized in Table 5 below.

Table 5: Pump Station Operation and Maintenance

Alt.	*Pump Access*	*Electrical and controls access*	*Pump maintenance requirements*	*Pump control*	*Overflow control*	*Total Score*
1	5	6	5	5	8	**29**
2	8	8	8	8	3	**35**
3	2	3	2	2	5	**14**

8.3. Environmental and Permitting

8.3.1. Wetlands – Impact on Wetlands

Alt. 1 – Chlorine Building: Highest Score (9), this alternative is completely contained within an existing building and would not affect any wetlands.

Alt. 2 – Pre-Engineered Pump Station: Low score (2), pump station building structure is within the stormwater management area. Relocation of the stormwater area may encroach wetland buffer area.

Alt. 3 – Contact Tank: Moderate score (5), addition can be partially in the stormwater area, but a new stormwater management area should not be required.

8.3.2. Floodplains – Impact on 100-yr Flood Plain

Alt. 1 – Chlorine Building: Highest score (9), this alternative is completely contained within an existing building and has no encroachment on the 100-yr floodplain.

Alt. 2 – Pre-Engineered Pump Station: Low score (2), pump station building structure is within the stormwater management area adjacent to the 100-yr floodplain area. Relocation of the stormwater management area may be in the floodplain.

Alt. 3 – Contact Tank: Moderate score (5), addition can be partially or entirely within 100-yr floodplain, and if so, is not as large as alternative 2.

8.3.3. Permitting – Amount of permitting required.

Alt. 1 – Chlorine Building: Highest score (9), no permits are presumed to be required for altering the interior of an existing building.

Alt. 2 – Pre-Engineered Pump Station: Moderate score (5), stormwater permitting will be required, though not considered too difficult to acquire.

Alt. 3 – Contact Tank: Moderate score (6), it is expected same permits for alternative 2 will have to be acquired for alternative 3, however, may be easier to obtain under alternative 3 due to less ground disturbance.

Analysis of the three alternatives impacting Environmental and Permitting issues is summarized in Table 6 below.

Table 6: Environmental Impact and Permitting

Alt.	*Wetlands and Vernal Pools*	*100-yr Flood Plain*	*Permitting*	*Total Score*
1	9	9	9	**27**
2	2	2	5	**9**
3	5	5	6	**16**

8.4. Constructability

8.4.1. Mechanical – Complexity and amount mechanical and instrumentation equipment installation.

Alt. 1 – Chlorine Building: Moderately low score (3), the alternative involves significant construction of many mechanical joints in awkward and tight areas

and confined space. The existing pumps must be removed and panels relocated. Construction will prove to be difficult and timely.

Alt. 2 Pre-Engineered Pump Station: Highest score (8), the area this alternative is proposed in is clear of existing piping and obstacles.

Alt. 3 – Contact Tank: Lowest score (2), this alternative requires designing a pump mounting and removal system over a contact tank. The alternative will be relatively tight when connecting pumps to the forcemain.

8.4.2. Site civil – Complexity and amount of civil and site work.

Alt. 1 – Chlorine Building: Highest possible score (9), minimal site work is expected through this alternative.

Alt. 2 – Pre-Engineered Pump Station: Low score (2), the alternative with by far the most civil site work, also involves altering storm water management system, located in this corner of the plant.

Alt. 3 – Contact Tank: Moderate low score (4), some civil/site work is expected, but not as much as alternative 2.

8.4.3. Construction Duration – Estimated relative duration of project.

Alt. 1 – Chlorine Building: Low score (3), due to space constraints and complexity of installations, and amount of specialty work involved, this alternative is expected to last by far the longest of the three alternatives.

Alt. 2 – Pre-Engineered Pump Station: Highest score (8), with a pre-engineered pump station, the site civil work can be done before the pump station arrives at the site.

Alt. 3 – Contact Tank: Low score (3), although the level of difficulty of constructing this alternative is not that great, it is still however, a modification to a chlorine contact tank, which will inevitably require a fair amount of time.

8.4.4. Structural – Complexity and amount of structural work.

Alt. 1 – Chlorine Building: Lowest score (3), there is a large amount of structural modifications involved in this alternative, mainly pertaining to modifying elements of the existing chlorine building.

Alt. 2 – Pre-Engineered Pump Station: Moderate Score (7), although this alternative involves a prefabricated building, some structural analysis may have to be done for the soil.

Alt. 3 – Contact Tank: Moderate score (4), some structural work is expected.

8.4.5. Retrofit – Complexity and amount of retrofit work required.

Alt. 1 – Chlorine Building: Lowest score (2), this alternative will require a large amount of retrofit work to have the pumps, valves and electrical equipment installed in this building.

Alt. 2 – Pre-Engineered Pump Station: Highest score (8), there is minimal retrofit work involved for influent and effluent flow control.

Alt. 3 – Contact Tank: Moderate score (4), although alternative is primarily new construction, some modifications may have to be done to the chlorine contact tank.

Analysis of the three alternatives impacting Constructability is summarized in Table 7 below.

Table 7: Constructability

Alt.	*Mechanical*	*Civil and Site Work*	*Construction duration*	*Structural*	*Retrofit*	*Total Score*
1	3	9	3	3	2	**20**
2	8	2	8	7	8	**33**
3	2	4	3	4	4	**17**

8.5. Final Pump Station Alternative Analysis

Table 8: Final Analysis

Alt.	*WWTP Operations*	*PS Operation and Maintenance*	*Env. Impact and Permitting*	*Constructability*	*Total Score*	*Cost (Millions)*
1	21	29	27	20	**97**	**$2.215**
2	24	35	9	33	**101**	**$1.660**
3	13	14	16	17	**60**	**$1.920**

As shown in the section above, Alternative No. 2 pre-engineered pump station ranks the highest in three of the four categories compared to retrofitting the chlorine building or installing a duplex pump system in the chlorine contact tank. With the exception of environmental issues, installing a pre-engineered facility has the least impact to the WWTP, allows for suitable operation and maintenance of the pump station, and can be installed without severely impacting the WWTP site. Further analysis should be done regarding subgrade issues and outdoor emergency generator location, and additional permitting will be required for this alternative.

It is also recommended that a submersible pump be used in the pre-engineered station as opposed to a vertical turbine or vacuum primed pump. Using a vertical turbine pump in a pre-engineered building would require a custom facility to be constructed, with skylights for installation and removal of the pump and motors. A pre-engineered facility with vertical turbine pumps would be more difficult to operate and maintain. Vacuum primed pumps are less efficient compared to submersible pumps, and would more maintenance and operational costs. For the submersible pump option, an access hatch would be installed in the concrete top slab over the wet well and the pumps would be installed on rails for easy removal. The modular building would be adjacent to the access hatch. The pump discharge pipe would come up vertically and into the modular building. The modular building would include the check valves and isolation valves for each pump. The common discharge pipe would then go down through the floor of the building. The

pump control panel would also be installed inside the building. A new electrical service and an outdoor generator would be provided to serve the effluent pump station.

Regarding construction costs, the conceptual construction estimate for the pre-engineered pump station is $1,660,000, approximately 25% less expensive than retrofitting the chlorine building ($2,215,000), and 14% less expensive than modifying the chlorine contact tank ($1,920,000). It is noteworthy that construction duration with a pre-engineered pump station is significantly less than that of the other two alternatives.

Regarding chlorination versus ultraviolet disinfection, it is recommended that the County evaluate the benefits and disadvantages of switching to ultraviolet disinfection (no in-stream chemicals required for disinfection or dechlorination, versus higher power consumption) while planning for the implementation of the effluent reuse plan. If the County decides to replace chlorination with UV disinfection, then the effluent reuse pump station design should facilitate the future UV disinfection installation.

FIGURES

Figure 1 - WWTP Aerial Site Plan
Figure 2 – WWTP Site Plan
Figure 3 – WWTP Flow Diagram
Figure 4 – WWTP Hydraulic Profile
Figure 5 – Existing Electrical One Line Diagram

		Job No.	Date	Figure
HDR	NORTHEAST MARYLAND WASTE DISPOSAL AUTHORITY TECHNICAL MEMORANDUM NO. 4 WWTP SITE LOCATION: JOPPATOWNE, HARFORD COUNTY, MARYLAND	67242	01/25/08	1

\\Pri-srv2\Projects\001978_NORTHEAST MARYLAND WASTE DISPOSAL AUTH\0067242_NMWDA-JM-JOPPATOWNE WWTP EFFLU\GIS\map_docs\mxd\Fig1_WWTP.mxd

NOTE:
THE INFORMATION ON THIS DRAWING IS A 1997 AS-BUILT THAT WAS CREATED BY STEARNS & WHEELER.

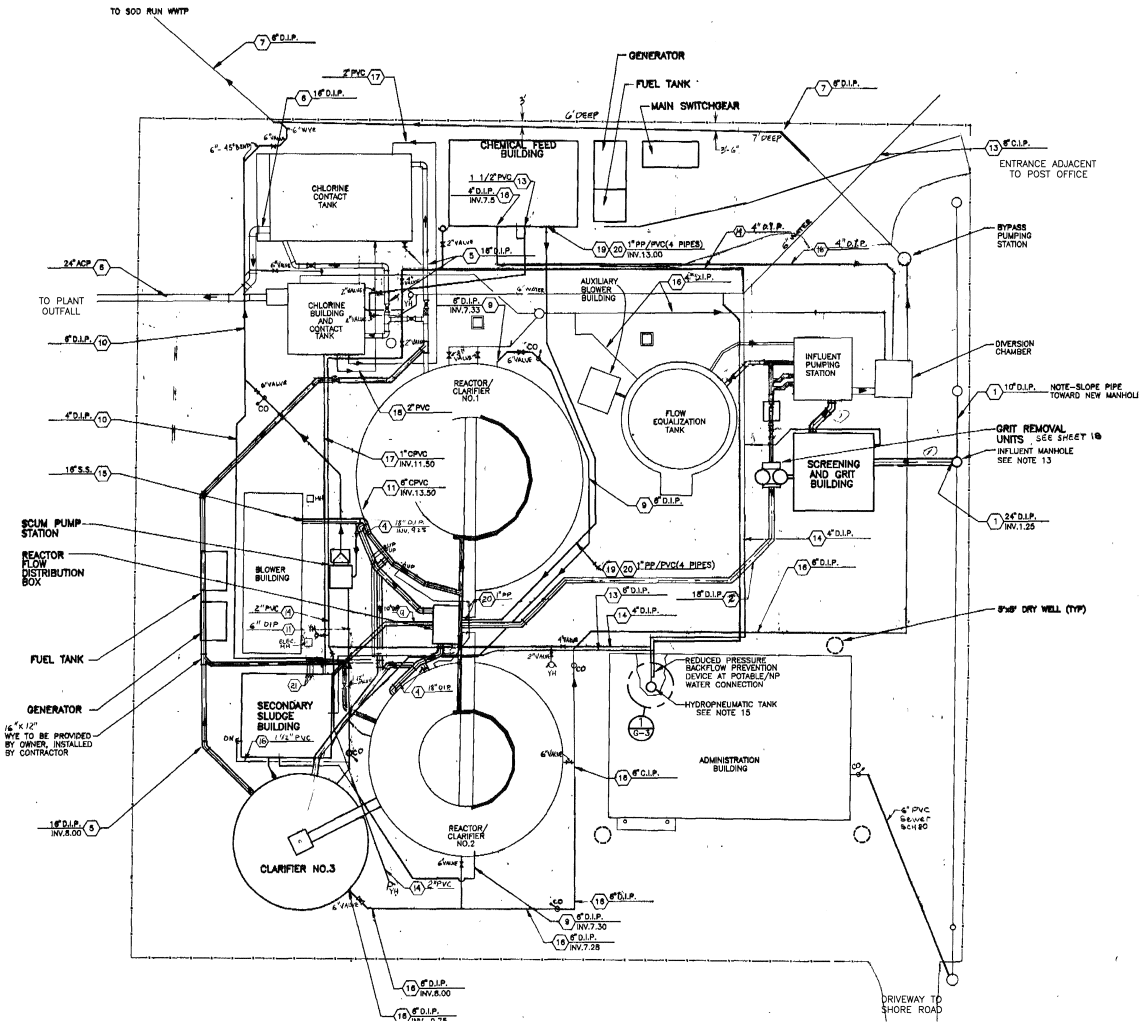

HDR Engineering, Inc.	**Effluent Reuse Study** **Northeast Maryland** **Waste Disposal Authority** **Joppatowne, Harford County, Maryland**	DATE **JANUARY 2008** FIGURE **FIGURE 2**	**EXISTING SITE PLAN**

C:\pwxnworking\dms76147\01C-1.00.dwg, Layout1, 1/25/2008 10:08:50 AM, 1:2

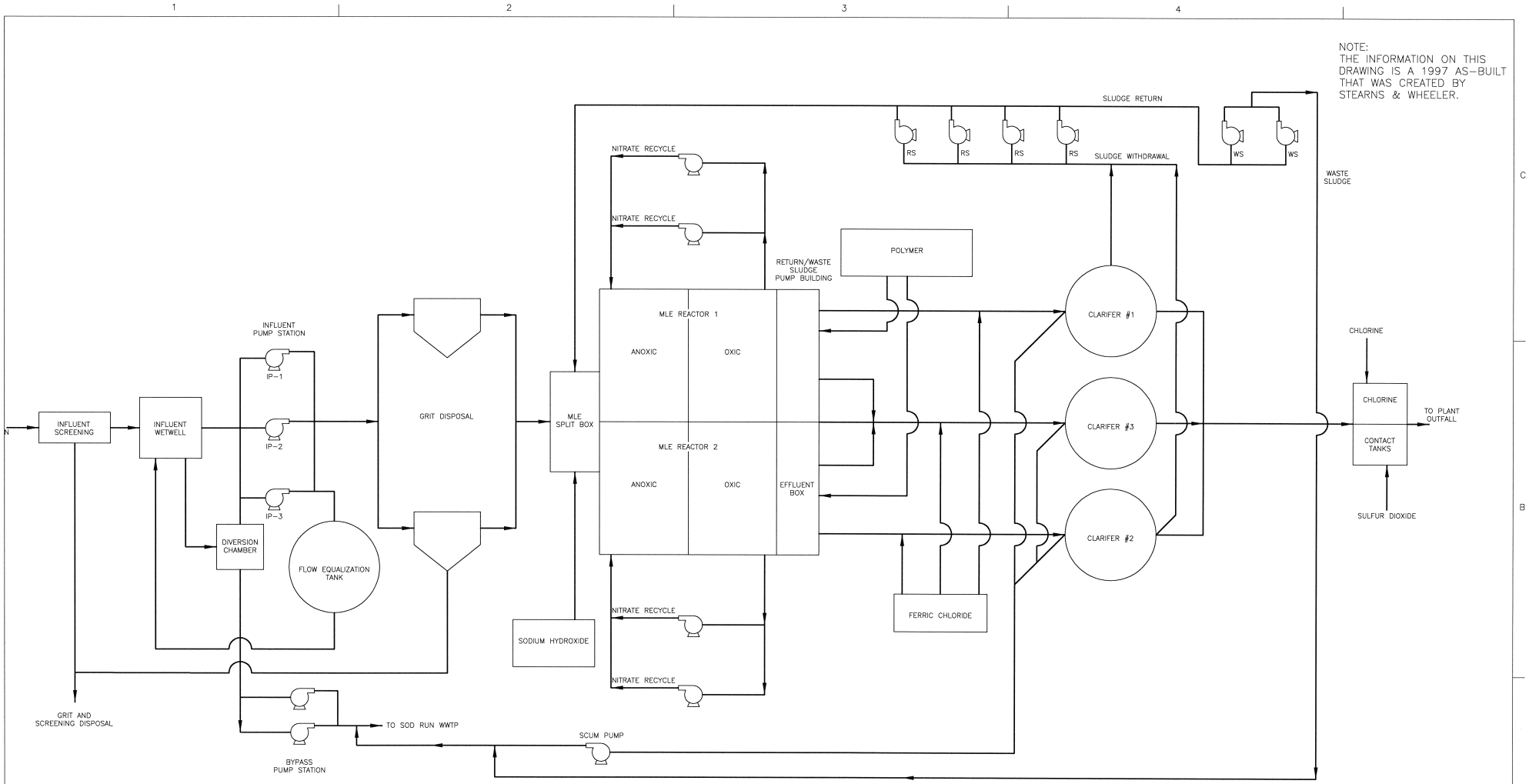

HDR Engineering, Inc.

Effluent Reuse Study
Northeast Maryland
Waste Disposal Authority
Joppatowne, Harford County, Maryland

DATE
JANUARY 2008

FIGURE
FIGURE 3

WWTP FLOW DIAGRAM

C:\pwxmworking\dms76147\01D-1.00.dwg, Layout1, 1/25/2008 10:01:44 AM, 1:2

NOTE:
THE INFORMATION ON THIS DRAWING IS A 1997 AS-BUILT THAT WAS CREATED BY STEARNS & WHEELER.

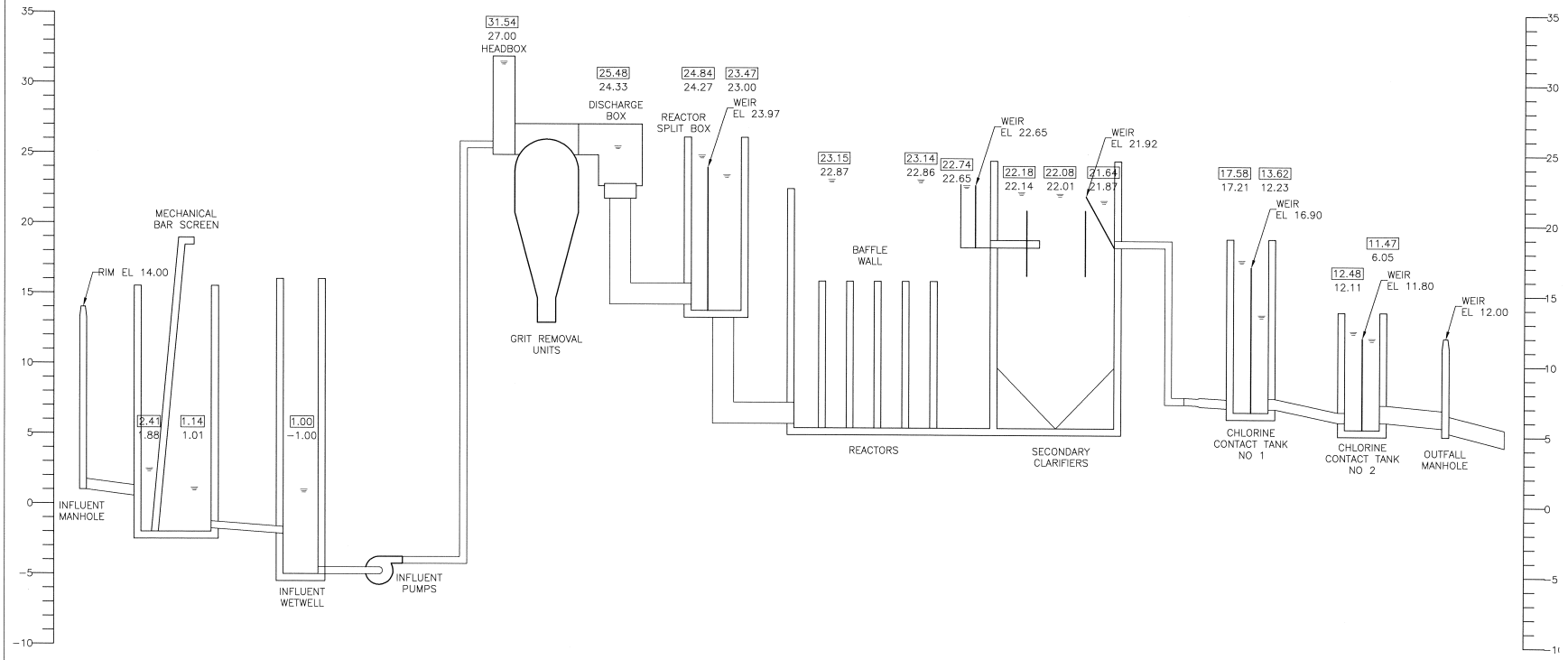

HDR Engineering, Inc.

Effluent Reuse Study
Northeast Maryland
Waste Disposal Authority
Joppatowne, Harford County, Maryland

DATE
JANUARY 2008

FIGURE
FIGURE 4

WWTP HYDRAULIC PROFILE

C:\pwxmworking\dms76147\01D-1.04.dwg, Layout1, 1/25/2008 10:51:19 AM, 1:2

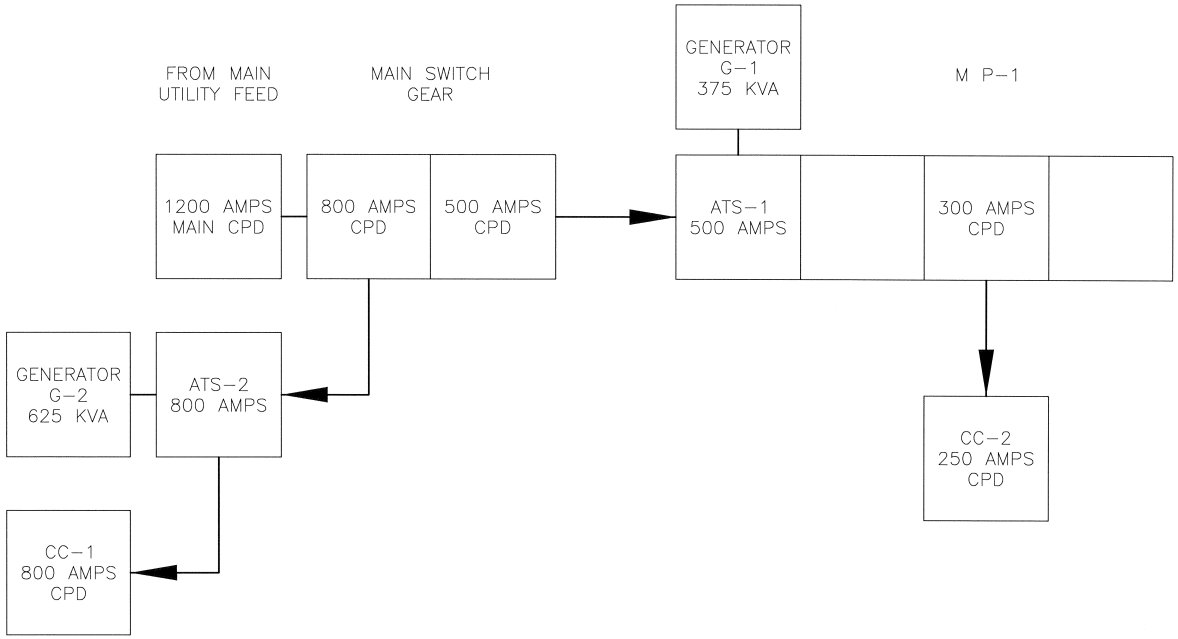

HDR Engineering, Inc.

Effluent Reuse Study
Northeast Maryland
Waste Disposal Authority
Joppatowne, Harford County, Maryland

DATE
JANUARY 2008

FIGURE
FIGURE 5

EXISTING ELECTRICAL ONE LINE DIAGRAM

C:\pwxmworking\dms76147\01D-1.05.dwg, Layout1, 1/25/2008 9:47:07 AM, 1:2

ATTACHMENT A

WWTP Photographs

Harford County Effluent Re-Use
WWTP and Pump Station Alternative Pictures

Picture 1: Chlorine Contact Tank and Chlorine Building, Looking South East

Picture 2: Back of Chlorine Building, Looking West

Harford County Effluent Re-Use
WWTP and Pump Station Alternative Pictures

Picture 3: Chlorine Contact Tank, Looking Northwest

Picture 4: Chlorine Building, Looking Southwest

Harford County Effluent Re-Use
WWTP and Pump Station Alternative Pictures

Picture 5: Chlorine Contact, Looking North

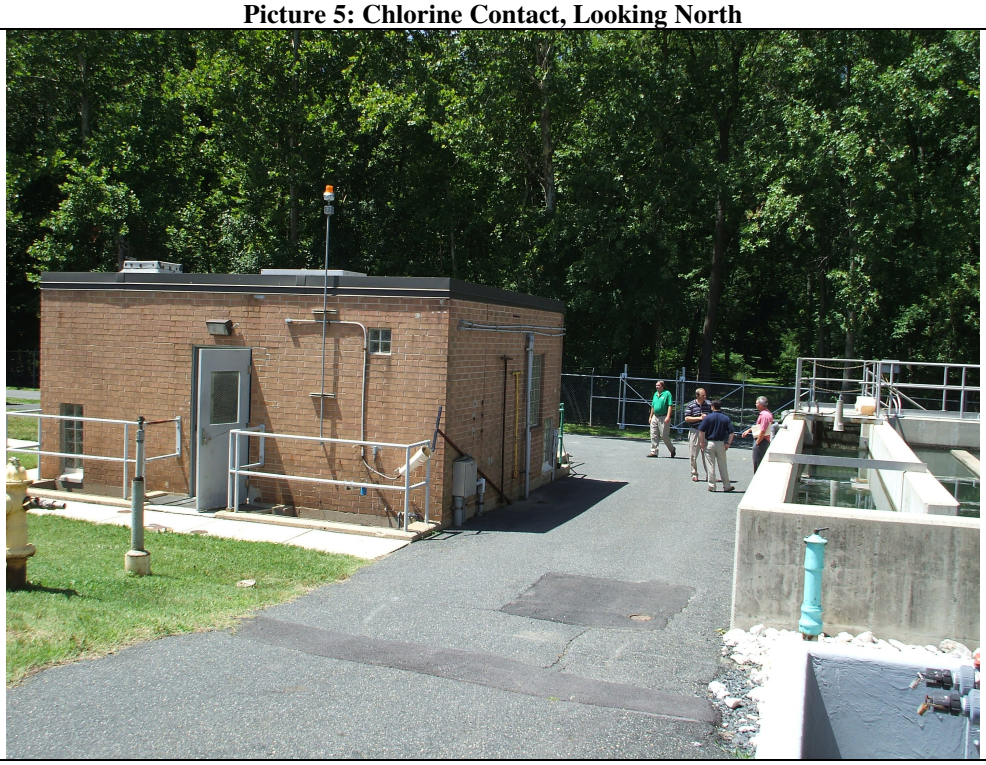

Picture 6: Chlorine Contact Tank and Chlorine Building, Looking West

Harford County Effluent Re-Use
WWTP and Pump Station Alternative Pictures

Picture 7: Chlorine Building, Electrical Panels, Proposed Location of Pump Station Alt. 1

Picture 8: Proposed location of Pump Station Alt. 2, Stormwater Management Swales Visible

Harford County Effluent Re-Use
WWTP and Pump Station Alternative Pictures

Figure 9: Chlorine Contact Tank, Looking East, Proposed Location of Pump Station Alt. 3

ATTACHMENT B

Electrical Evaluation Field Report

HDR | ONE COMPANY *Many Solutions*℠

Electrical Field Report
Pump Station Evaluation

To:	David Pergrin, Harford County Division of Water & Sewer Chris Skaggs, Northeast Maryland Waste Disposal Authority		
From:	Nidal Esmeraldeh, HDR	Project:	Pumping of Reclaimed Water from Joppatowne WWTP to the NMWDA Waste to Energy Facility
CC:			
Date:	January 21st, 2008	Job No:	147-67242

RE: ELECTRICAL ASSESMENT EVALUATION FIELD REPORT

1. Introduction

The existing electrical system consists of:

- A 500 KVA pole mounted transformer bank utility supply.
- A Square D main switchgear with a 1200 Amp over current protective device (refer to picture No.1).
- The main switchgear is divided into two main sections.
    - One is MCC-CC-1, in the blower building, which is protected with an 800 Amp over current protective device from the main switchgear. MCC-CC-1 is made by Square D (refer to picture No.2).
    - The other section is MOP-1 which is protected with a 500 Amp over current protective device.
- MOP-1 feeds several section of the plant such as, the flow equalization tank building, chlorination building, bypass pump station, chemical building, and MCC-CC-2.
- MCC-CC-2, in the influent pumping station, is protected with a 300 Amp over current protective device in MOP-1. MCC-CC-2 is of a Square D type (refer to picture No.3).
- Two emergency diesel generators exist in the building for back up power.
    - Generator G-1 is 375 KVA and is the back up feed to MOP-1. It is manufactured by Stamford- AC Generator Company (refer to picture No.4).
    - Generator G-2 is 625 KVA and is the back up power to MCC-CC-2. It is manufactured by Kohler Generator Company.
- Two automatic transfer switches exist to switch between utility power and emergency diesel generator power.

- ATS-1 is the automatic transfer switch installed inside the main switchgear compartment to switch from utility power to generator G-1 to power MOP-1.

ATS-2 is the automatic transfer switch installed in the blower building to switch from utility power to G-2 power to feed MCC-CC-1. ATs-2 is manufactured by Kohler Power Systems (refer to picture No.5).

2. Purpose

The purpose of this project is to design a system to transfer water from waste water treatment plant to the waste to energy plant. The project will include a redundant system of two variable speed drives. The drives will control the pumps by means of changing the speed on the pumps based on the pressure at the discharge header. The drives will be controlled by a system consisting of pressure sensors, a programmable logic controller, and two variable frequency drives. The programmable logic controller will command the drives to speed up or slow down the pumps based on the pressure on the header. The PLC will be of an Allen Bradley family consistence with the existing PLC. Ethernet/IP network will be used to transfer communication between the new pump PLC and the existing DCS system in the blower room. The new pumps will have a local selector switch to switch between manual and auto operation of the pumps. In manual operation the user will be able to adjust the flow from the existing DCS system. Another local selector switch will be installed at the drive panel to switch between automatic and hand mode. In hand mode, the pumps and VFD are controlled by the operator in the field.

3. Assumptions

- There will be no data communication between the two plants.
- The waste to energy plant will have its own flow rate control on their side.
- The new pumps won't have a diesel back up. Incase of a utility power shut down, the original design will run on diesel power. However, the new 50-100Hp pumps will not be required to run during a loss of site power.

4. Required Analysis

A load study was done on the plant electrical system to verify if the system has sufficient excess capacity to handle the new pump station. The analysis was based on information obtained from the as built electrical drawing by Stearns & Wheler, as well as information obtained from the site visit on December 17, 2007.

5. Applicable Codes

- NEC 2005

6. Conclusion

The new system comprises of two 50-100 Hp pumps. It requires 96 Amp for each pump (NEC 2005) and the control cabinet with its associated PLC and instruments as well as other component as per table-1. The total power required is 156.9KVA.

The existing electrical service consists of a main switch gear and various other MCC's and load centers as per drawing 1.

1. MCC-CC1 disconnect has an 800 Amp over current protective device. It feeds loads in the blower building. CC-1 is also fed by an emergency diesel generator G-2 rated at 625 KVA. An 800 Amp transfer switch ATS-2 is installed for that section to switch between utility power and emergency diesel generator. CC1 is operating at a little over 625KVA as per attachment 1. Neither the diesel generator nor ATS-2 is adequate of handling the new pumps.
2. Assuming a best case scenario where reactor blowers RB-1, RB-2, RB-3, and RB-4 are redundant where only three out of four of them are running at a given time. Assuming that reactor mixers RM1-1, RM1-2, and RM1-3 are redundant where only two are running at a time.

   Assuming that reactor mixers RM2-1, RM2-2, RM2-3 are redundant where only two mixers are running at any given time.

   MCC-CC-1 has enough capacity to handle the new load it total operating load is 508 KVA. Refer to attachment 2.
3. MCC-CC-2 is fed from MOP-1 with an over current protective device rated at 300 Amp. The full operating load on CC2 is 189.56 KVA as per attachment 2. MCC-CC-2 is well coordinated without sufficient excess capacity to feed the new 75 Hp pumps as shown in attachment 3.
4. MOP-1 has 2 spare compartments. One is capable of housing up to a 400 Amp frame disconnect, and the other is capable of housing up to a 600 Amp disconnect. MOP-1 is fed from the 1200 Amp main bus and has a 500 Amp over current protecting device. The automatic transfer switch (ATS-1) is installed to switch to the emergency diesel generator G-1 which is the back up to MOP-1. MOP-1 is well coordinated without enough margin to feed the new two 75 Hp pumps. Refer to attachment 4.
5. The main switchgear has a 1200 Amp over current protective device. It is feeding 2 other over current protective devices. One is 800 Amp which feeds MCC-CC-1. The other is

500 Amp which feeds MOP-1. The main switchgear is well coordinated with no excess capacity for any additional load as per attachment 5.

Note: All calculations are based on information from the as built drawing by Stearns & Wheler and information obtained during a site visit and electrical survey.

7. Recommendations

7.1 Option No.1

Install a new utility service to power the pump station and have means of monitoring the cost of running the pumps. With this option there is a dedicated meter for the new pump station which will give the operator the ability of monitoring the cost of running pumps. This option requires no power outage to the existing plant.

7.2 Option No.2

Upgrade the main switch gear by upgrading the main 1200 Amp over current protective device and the 1200 bus bars and associated accessories. This option is very costly and requires a fair amount of power outage. If waste water treatment plant management prefers this option, more research must be conducted to determine feasibility of upgrade as well as cost of upgrade.

7.3 Option No.3

Feed the new 50-100 Hp pumps from MCC-CC-1 providing that only one pump is running at any given time. This option is feasible assuming that there is redundancy in the existing system. The new 50-100 Hp pumps will need to be interlocked to prevent the MCC-CC-1 from overloading. Another interlock would be required to shut off the new 50-100 Hp pumps if a power failure occurs and the secondary (diesel generator G-2) becomes the power source to MCC-CC-1. Refer to attachment 5 for more details.

Note: the existing redundant system consisting of the reactor blowers (RB-1, RB-2, RB-3, and RB-4), reactor mixers (RM1-1, RM1-2, and RM1-3), and reactor mixers (RM2-1, RM2-2, and RM2-3) must be electrically interlocked. This will prevent accidental start up of any one of the motors which may cause the main over current protective device to trip, as the existing electrical system does not have sufficient excess capacity to feed additional substantive load.

It is HDR's recommendation that option No.1 be implemented. Option No.1 balances cost with operatability and least invasive during construction as it does not require a plant power outage.
Option No.2 on the other hand is more expensive and requires a fair amount of power outage during construction.

Option No.3 is not as costly however its operation is limited to one pump at a time and requires interlocks to prevent from overloading the system.

Note: In the event the facility requires an emergency diesel generator backup to the new 50-100 Hp pumps a new emergency diesel generator would be required.

Attachment 1

CC-1 Main Breaker						
Unit discription	**Legend**	**MCCB size(Amps)**	**Hp**	**FLA (NEC 2005)**	**FLA**	**KVA**
Main		**800**				**664.32**
unit heater	UH-1	20	4 Kw		8.3	6.9
reactor blower	RB-1	200	100	124		103
unit heater	**UH-2**	20	6 Kw		12.5	10.4
reactor blower	**RB-2**	200	100	124		103
unit heater	**UH-3**	20	6 Kw		12.5	10.4
reactor blower	**RB-3**	200	100	124		103
Electric room exhaust fan		3	0.75	1.6		1.33
reactor blower	**RB-4**	200	100	124		103
waste activated sludge pump	**WS-1**	7	1.5	3		2.5
waste activated sludge pump	**WS-2**	7	1.5	3		2.5
clarifier No.3 drive		3				
exhaust fan	**F-1**	3	0.75	1.6		1.33
exhaust fan	**F-2**	3	0.75	1.6		1.33
Distribution panel No.4	**DP4**	150				
administration building		125	75 Kw		156.2	129.75
reactor mixer	**RM1-1**	30	10	14		8.3
reactor mixer	**RM1-2**	30	10	14		8.3
reactor mixer	**RM1-3**	30	10	14		8.3
reactor mixer	**RM2-1**	30	10	14		8.3
reactor mixer	**RM2-2**	30	10	14		8.3
reactor mixer	**RM2-3**	30	10	14		8.3

Total KVA	**628.24**

Generator	**G-2**	500				625

Attachment 2

CC-1 (with 0 KVA for redundant units) Main Breaker						
Unit discription	**Legend**	**MCCB size(Amps)**	**Hp**	**FLA (NEC 2005)**	**FLA**	**KVA**
Main		**800**				**664.32**
unit heater	UH-1	20	4 Kw		8.3	6.9
reactor blower	RB-1	200	100	124		0
unit heater	**UH-2**	20	6 Kw		12.5	10.4
reactor blower	**RB-2**	200	100	124		103
unit heater	**UH-3**	20	6 Kw		12.5	10.4
reactor blower	**RB-3**	200	100	124		103
Electric room exhaust fan		3	0.75	1.6		1.33
reactor blower	**RB-4**	200	100	124		103
waste activated sludge pump	**WS-1**	7	1.5	3		2.5
waste activated sludge pump	**WS-2**	7	1.5	3		2.5
clarifier No.3 drive		3				
exhaust fan	**F-1**	3	0.75	1.6		1.33
exhaust fan	**F-2**	3	0.75	1.6		1.33
Distribution panel No.4	**DP4**	150				
administration building		125	75 Kw		156.2	129.75
reactor mixer	**RM1-1**	30	10	14		0
reactor mixer	**RM1-2**	30	10	14		8.3
reactor mixer	**RM1-3**	30	10	14		8.3
reactor mixer	**RM2-1**	30	10	14		0
reactor mixer	**RM2-2**	30	10	14		8.3
reactor mixer	**RM2-3**	30	10	14		8.3

Total KVA	**508.64**

Generator	**G-2**	500				625

Attachment 3

CC-2 Main Lug						
Unit discription	**Legend**	**MCCB size(Amps)**	**Hp**	**FLA (NEC 2005)**	Utilization Factor	**KVA**
Main		**250**				**207.6**
Screening & grit room fan	F-5	3	1	2.1		1.75
Screening & grit room lower level fan	F-6	3	0.5	1.1		0.92
distribution panel	DP	150			70%	87.2
infuent pump	VFD	150	3--25		70%	87.2
equalization tank M.O.V.		15	0.5	1.1		0.92
mechanical filter screen		3	1	2.1		1.75
screening compactor		7	3	4.8		4
clarigester No.1		7				5.82
total KVA						**189.56**

Generator	G-1	450				375

Attachment 4

600 Amp Bus 500 OCPD MOP-1				
Unit description	**Legend**	**size(Amps)**	**Utilization Factor**	**KVA**
Main		**500**		**415.2**
chemical building		100	70%	58.1
existing bypass pump station		100	70%	58.1
existing chlorination building		100	70%	58.1
existing flow equalization tank bldg		100	70%	58.1
influent pumping station	CC-2	300	70%	189.6
total KVA @ 70% utilization				**422.00**

Generator	G-1	450		375

Attachment 5

1200 Amp Bus 1200 OCPD Main switchgear			
Unit description	**size(Amps)**	**Frame(Amp)**	**KVA**
Main	**1200**	1200	**996.48**
800 Amp Section	800	1000	628.24
MOP1-500 Amp Section	500	600	422.00
total KVA			**1050.24**

Table 1

New Pump station Equipment			
Unit description	**size(Amps)**	**Voltage (Volt)**	**KVA**
Two 75 hp pumps	**192**	480	153
PLC & instrumentations	10	110	1.1
Exhaust fan 2hp	3.4	480	2.8
Two Unit heaters (4 KW)*	8.3	480	13.8
total KVA			170.7
Subtract unit heaters KVA to get actual **total**			**156.9**

* Unit heaters will run only if 75 Hp pumps are off.

Picture No.1 Main switchgear.

Picture No.2 MCC-CC-1

Picture No.3 MCC-CC-2

Picture No.4 Diesel Generator G-1

Picture No.5 Transfer Switch ATS-2

ATTACHMENT C

Monthly Effluent Quality Data

Attachment C
Standard Effluent Quality Sampling

	Suspended Solids (mg/L)	B.O.D. (mg/L)	Total Phosphorus (mg/L)	Ortho-phosphorus (mg/L)	T.K.N. (mg/L)	Ammonia Nitrogen (mg/L)	Nitrate Nitrite Nitrogen (mg/L)	Organic Nitrogen (mg/L)	Total Nitrogen (mg/L)	Fecal Coli form (MPN)	Alkalinity (mg/L)
Dec-05	4.42	4.63	0.78	0.35	1.40	0.15	4.17	1.25	5.56	3.36	96.50
Jan-06	3.11	3.88	0.39	0.15	2.37	1.45	4.49	0.90	6.86	2.83	78.50
Feb-06	5.00	4.76	0.81	0.30	4.05	1.08	5.42		9.47		
Mar-06	4.38	4.63	0.41	0.40	9.19	5.60	2.74	3.59	11.92	2.00	118.50
Apr-06	3.63	5.00	0.23	0.17	2.25	0.30	3.07	2.04	5.32	2.00	97.00
May-06	2.50	4.25	0.98	0.20	3.35	1.91	2.10	1.45	5.45	2.78	108.50
Jun-06	2.50	3.25	0.61	0.45	7.82	4.48	1.96	3.34	9.78	3.00	92.50
Jul-06	1.38	3.25	1.38	0.84	3.27		3.11	2.97	6.38	19.80	87.00
Aug-06	1.00	6.83	1.25	0.70	1.61		3.15	1.73	4.76	36.00	80.00
Sep-06	1.25	4.88	0.91	0.46	7.35	1.70	2.50	5.65	9.85	7.00	60.75
Oct-06	1.75	5.63	1.06	0.76	1.30		10.05	1.00	11.35	2.00	67.00
Nov-06	6.88	10.13	0.91	1.05	2.30	0.50	2.80	1.94	5.10	13.00	67.50
Dec-06	4.13	7.00	0.54	0.50	2.35	0.30	4.93	2.05	7.28	2.00	71.50
Jan-07	2.75	8.75	0.20	0.08	3.82	1.93	3.39	1.90	7.21	2.00	73.25
Feb-07	2.63	9.63	0.31	0.25	1.95	0.23	3.86		5.81	1.00	76.00
Mar-07	4.88	11.25	0.28	0.10	6.60	4.10	1.94	2.50	8.54	1.00	80.25
Apr-07	4.00	6.25	0.33	0.20	2.71	0.43	3.51	2.29	6.22	1.00	63.75
May-07	3.88	8.38	0.30	0.10	1.30	0.15	3.45	1.15	4.75	3.00	70.75
Jun-07	4.75	11.38	0.93	0.55	1.58	0.15	2.95	1.43	4.53	2.00	77.50
Jul-07	3.13	8.38	0.88	0.60	1.25	0.15	2.28	1.10	3.53	1.00	78.50
Aug-07	2.25	7.75	0.76	0.35	1.70	0.15	3.32	1.55	5.02	2.00	76.50
Sep-07	2.50	8.13	0.26	0.20	1.15	0.53	1.79	0.63	2.94	9.00	78.75
Oct-07	3.00	4.63	0.64	0.30	1.45	0.28	1.98	1.18	3.43	3.00	79.75
Average	3.29	6.63	0.66	0.39	3.13	1.28	3.43	1.98	6.57	5.49	80.92
Max Month	6.88	11.38	1.38	1.05	9.19	5.60	10.05	5.65	11.92	36.00	118.50

Attachment C
Additional Parameter Effluent Quality Sampling

Sample period	Alkalinity (mg/L)	Ammonia Nitrogen (mg/L)	Chloride (mg/L)	Hardness (mg/L)	Ortho Phosphate (mg/L)	Spec. Conductance (us/cm)	Sulfate (mg/L)	TDS (mg/L)	Turbidity (NTU)	pH
11/7/2007	90	0.22	71.6	76	0.81	492	35.7	287	0.83	7.49
11/8/2007	87	0.11	73.6	72	1.34	488	37.5	283	0.49	7.45
11/9/2007	89	0.23	70.5	76	1.1	495	35.2	301	0.62	7.18
11/12/2007	92	0.25	69.9	80	0.94	494	34.1	275	1.53	6.93
11/14/2007	82	0.12	72.2	76	0.83	476	33.1	262	0.51	6.98
11/15/2007	77	0.17	75.9	80	0.87	470	33	280	0.84	6.79
11/16/2007	66	0.14	81	80	0.68	471	33.1	278	1.71	7.46
11/19/2007	72	0.36	89.5	84	0.38	485	34.6	298	2.48	6.96
11/20/2007	89	0.18	70.8	80	0.71	466	34	268	1.21	6.96
11/21/2007	61	0.25	90.1	84	0.32	487	33.9	302	2.65	6.81
average	80.5	0.20	76.5	79	0.798	482	34.4	283	1.29	7.10
max	92	0.36	90.1	84	1.34	495	37.5	302	2.65	7.49

ATTACHMENT D

ENR Upgrade Alternatives

NOTE:
THE INFORMATION ON THIS DRAWING WAS CREATED BY BLACK & VEATCH CORPORATION IN 2005.

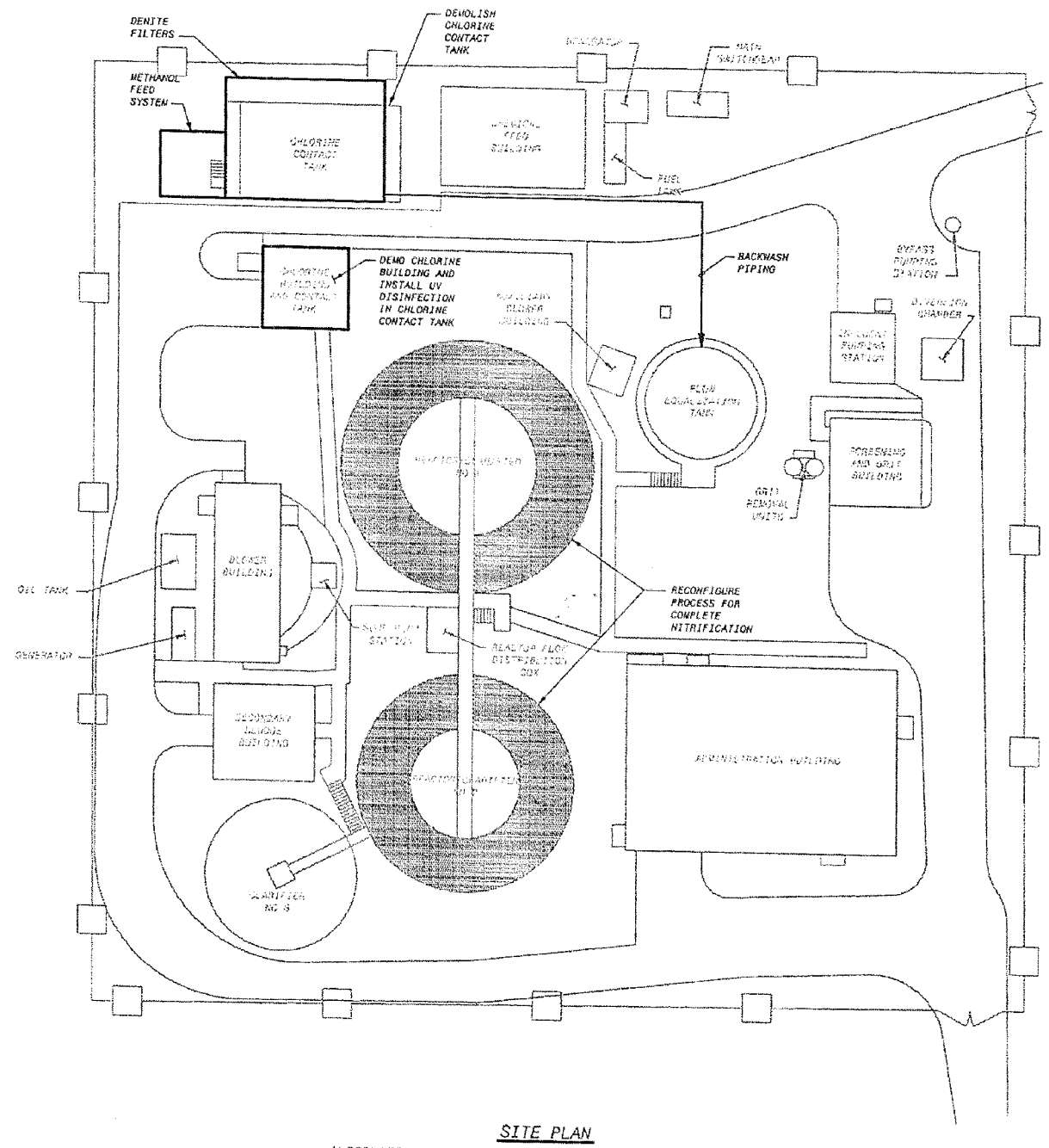

SITE PLAN

ALTERNATIVE 1 - MLE CONFIGURATION WITH DENITE FILTERS

HDR Engineering, Inc.	Effluent Reuse Study Northeast Maryland Waste Disposal Authority Joppatowne, Harford County, Maryland	DATE JANUARY 2008 FIGURE D-1	ENR UPGRADE ALTERNATIVE 1

NOTE:
THE INFORMATION ON THIS DRAWING WAS CREATED BY BLACK & VEATCH CORPORATION IN 2005.

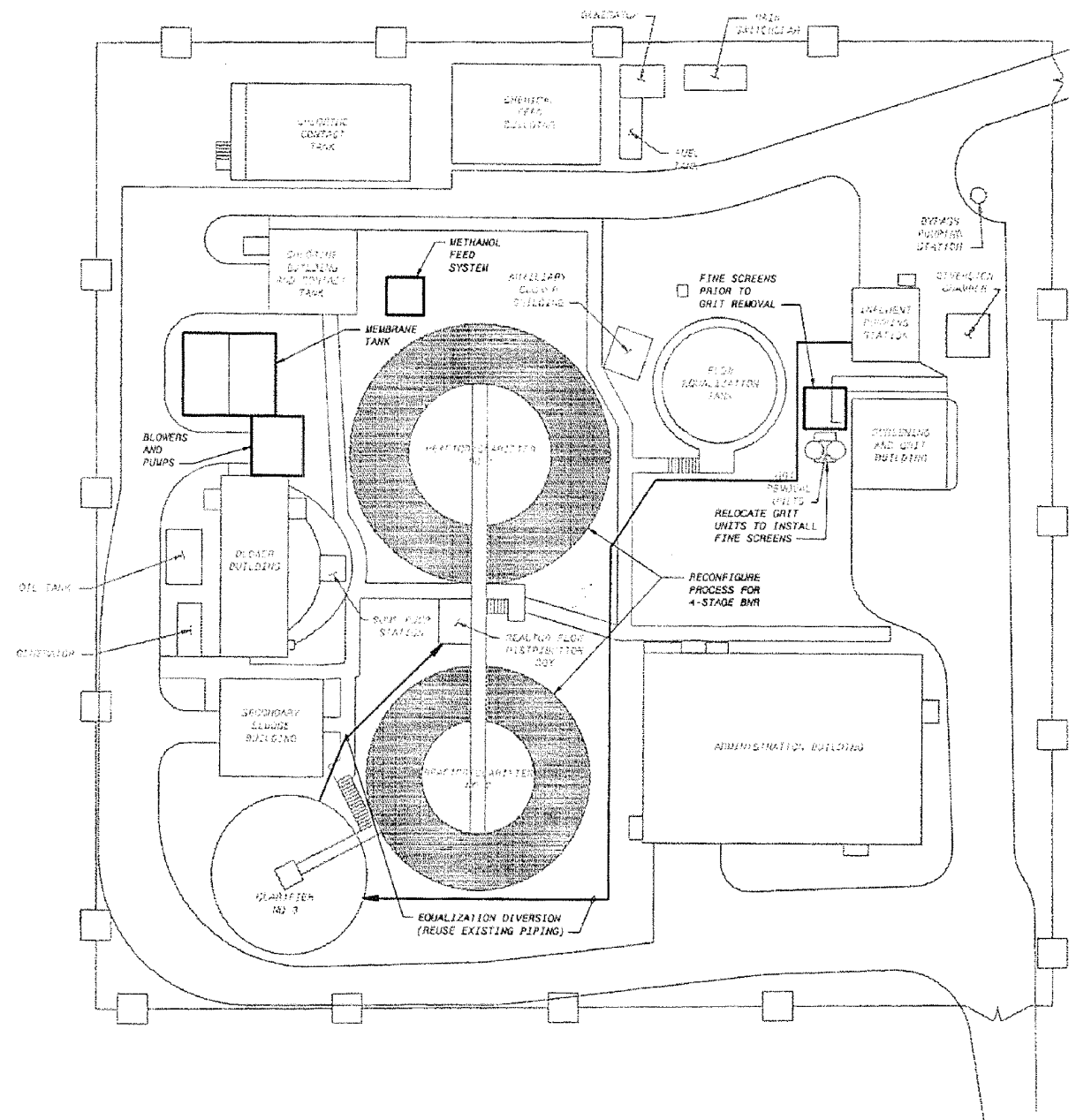

SITE PLAN

ALTERNATIVE 2 - 4-STAGE BNR WITH MEMBRANES

HDR Engineering, Inc.	Effluent Reuse Study Northeast Maryland Waste Disposal Authority Joppatowne, Harford County, Maryland	DATE JANUARY 2008 FIGURE D-2	ENR UPGRADE ALTERNATIVE 2

NOTE:
THE INFORMATION ON THIS DRAWING WAS CREATED BY BLACK & VEATCH CORPORATION IN 2005.

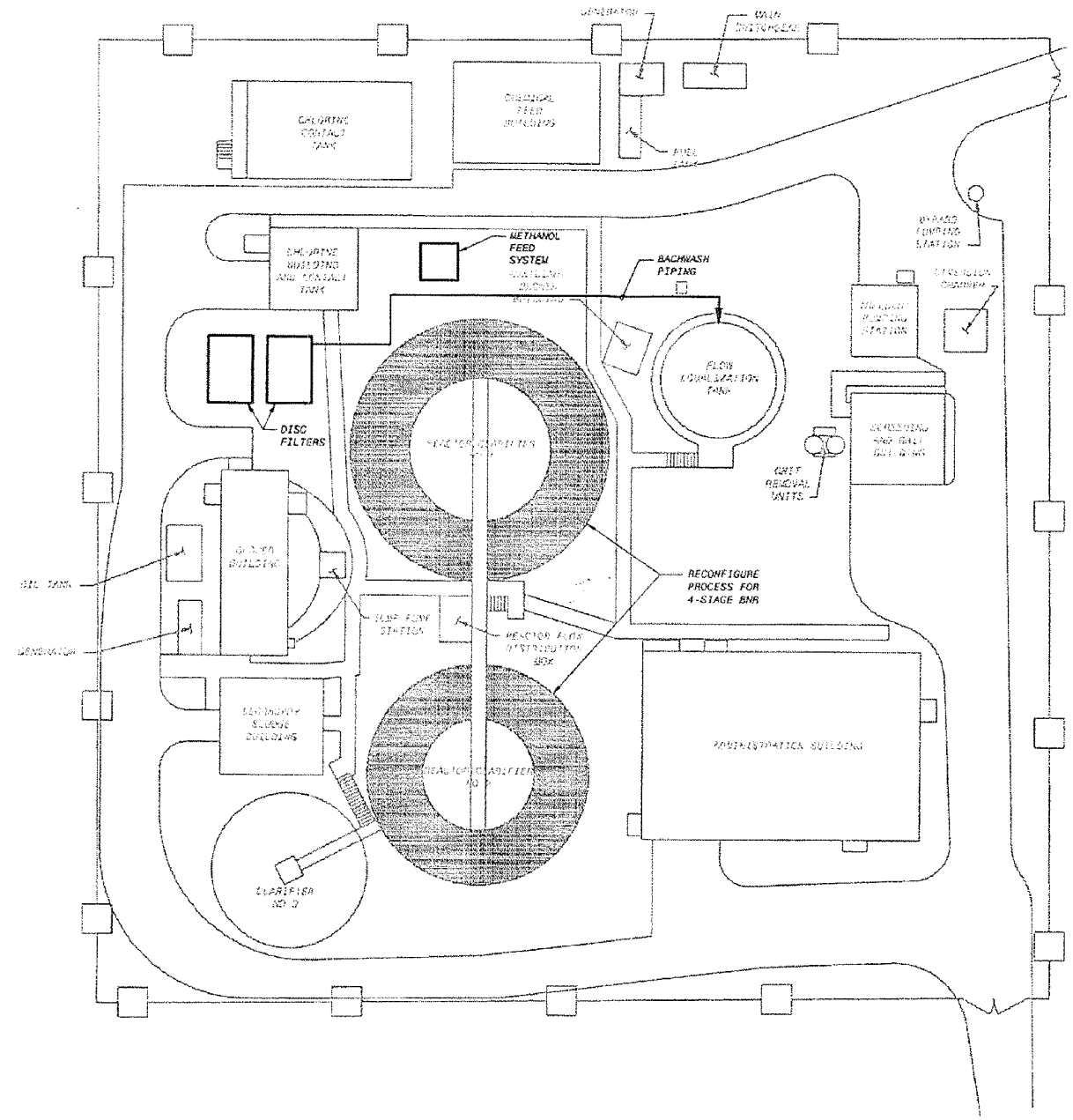

SITE PLAN

ALTERNATIVE 3 - 4-STAGE BNR WITH IFAS AND POLISHING FILTERS

HDR Engineering, Inc.

Effluent Reuse Study
Northeast Maryland
Waste Disposal Authority
Joppatowne, Harford County, Maryland

DATE
JANUARY 2008

FIGURE
D-3

ENR UPGRADE
ALTERNATIVE 3

ATTACHMENT E

Pump Type Summary Table

Pump	1	2	3
Item			
Style	Submersible	Vertical Turbine	Vacuum Prime / Suction Lift
Manufacturer	ABS	Weir Floway	Smith and Loveless
Contact	Craig Burmeister	Craig Burmeister	Mike Whelan
Model No.	AFP 1002 - ME 630/4-51.60	12DKH	8D4V
DRIVE	VFD	VFD	VFD
Motor HP	84.5	50	100
RPM	1775	1170	1760
Hydraulic Eff.	62%	83%	46.9%
Voltage	460V	230-460V	460V
Phase			3
Foot Print Dim (for 2)	3'-8" x 3'-6"	1'-6" x 3'-6"	
Height	5'-1"	5'-0"	
# Pumps	2	2	2
Size Solid Pass	3 1/8"		
Weight	1720 lbs		
Suction Pipe Size	4"	8"	8"
Discharge Pipe Size	4"	8"	8"
Minimum Submergence*	12"	35"	18"

*Minimum Submergence - off wet well bottom

Note: Some distances rounded up to the nearest unit inch

ATTACHMENT E-1

Submersible Pump Cut Sheets

AFP 1002

Dimension sheet ME4/ME5 WET-WELL Installation

Maßblatt ME4/ME5 Nassinstallation

Plan d'encombrement ME4/ME5 installation submersible

No: M-02.2195 - 00

Dat/Nam.: 14.03.07 / Horst Klein

Cad Code: M_022195

Technical changes reserved
Änderungen vorbehalten
ABS se réserve le droit de changer ses caractéristiques techniques

Type / Typ / Tipo **60 Hz**	Weight / Gewicht / Poids (~kg)	Weight / Gewicht / Poids (~lbs)	H (mm)	H (inch)
ME 250/4-41.60	470	1036	1355	53.3
ME 350/4-42.60	500	1103		
ME 430/4-43.60	510	1125		
ME 520/4-44.60	530	1169		
ME 630/4-51.60	780	1720	1540	60.6
ME 860/4-52.60	890	1963	1725	68
ME1040/4-53.60	945	2084		

Weight: Includes pump and slider bracket
Gewicht: Beinhaltet Pumpe und Halterung
Poids: Pompe et coulisseau

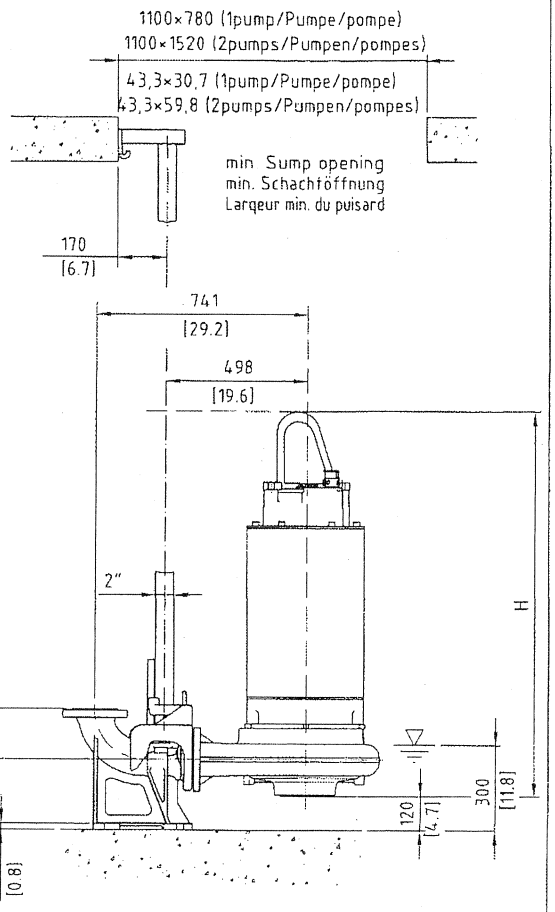

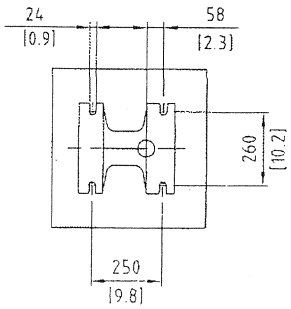

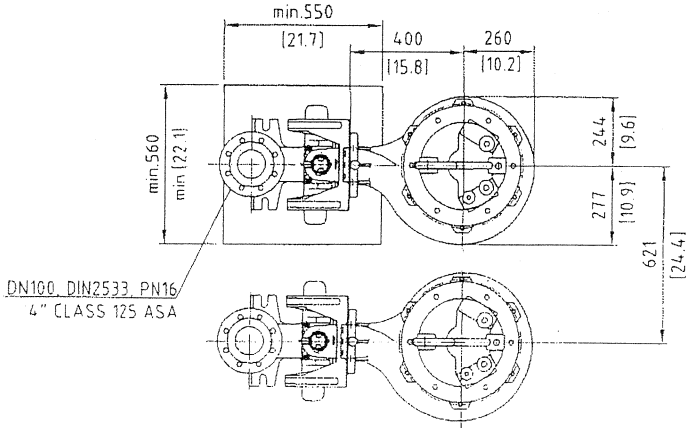

Connection details acc. to drw. AN-M.02.0343
Anschlußdetails nach Blatt AN-M.02.0343

[mm / inch]

Dimensions of C.I. 90° bend on request
Abmessungen für Guß-90° Bogen auf Anfrage
Dimension pour coude fonte 90° disponible sur demande

Foundation in acc. to drawing AN-20.043
Fundament nach Plan AN-20.043
Fondation selon schéma AN-20.043

Pump performance curves
AFP 1002 60 HZ

				Curve number
				Reference curve AFP 1002
			Discharge DN100	Frequency 60 Hz
Density 62.43 lb/ft³	Viscosity 0.0000169 ft²/s	Testnorm Hydraulic Institute	Rated speed 1775 rpm	Date 2007-12-24
Flow 853 US g.p.m.	Head 164 ft	Rated power 57.1 hp	Hydraulic efficiency 62 %	NPSH 11.9 ft

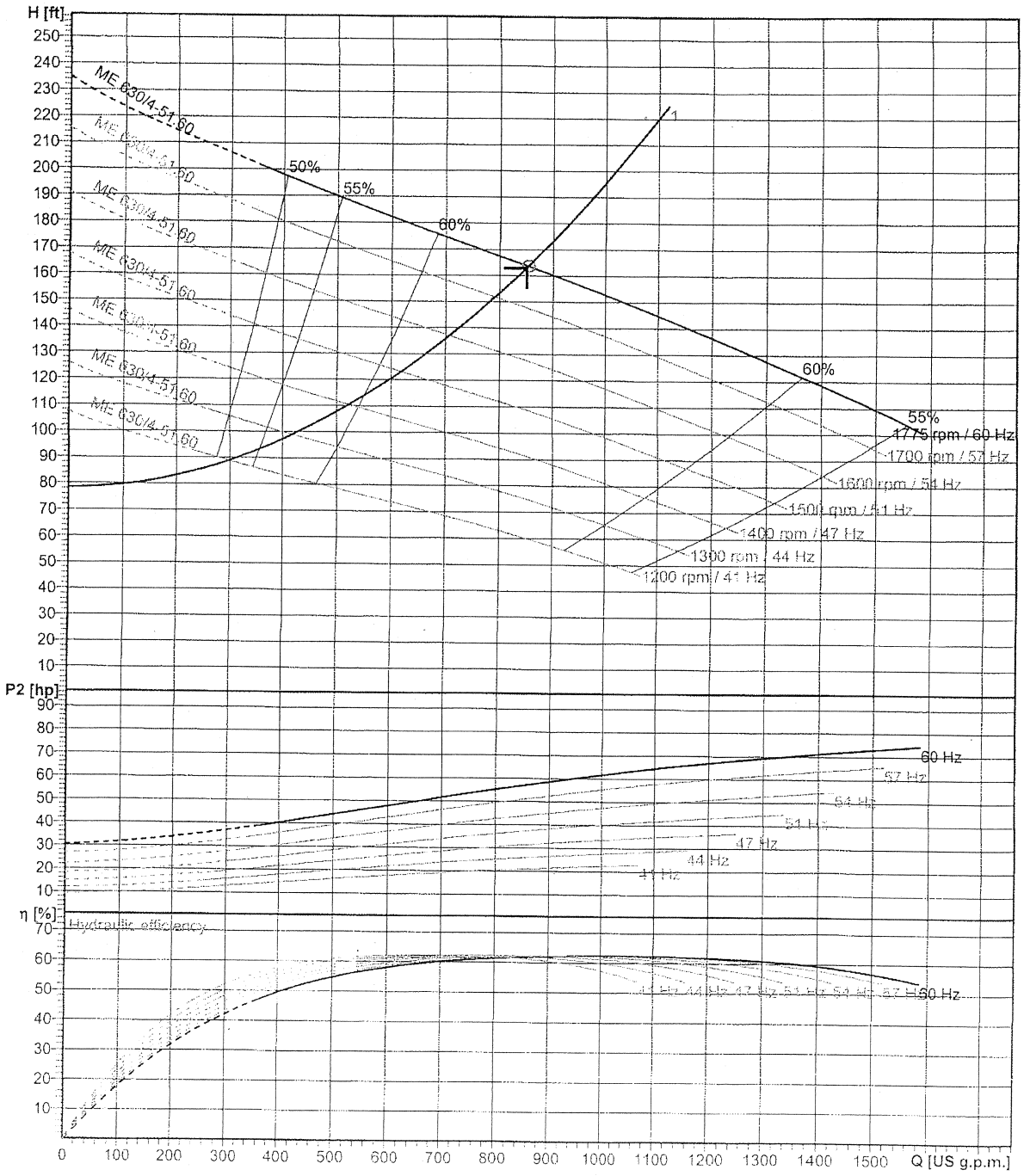

Impeller size	N° of vanes	Impeller	Solid size	Revision
14.5 inch	1	1-vane channel impeller	3 1/8"	2007-09-19

ABS reserves the right to change any data and dimensions without prior notice and can not be held responsible for the use of information contained in this software.

ABSEL PRO 1.7.2 / 2007-02-07

AFP 1002 60 HZ

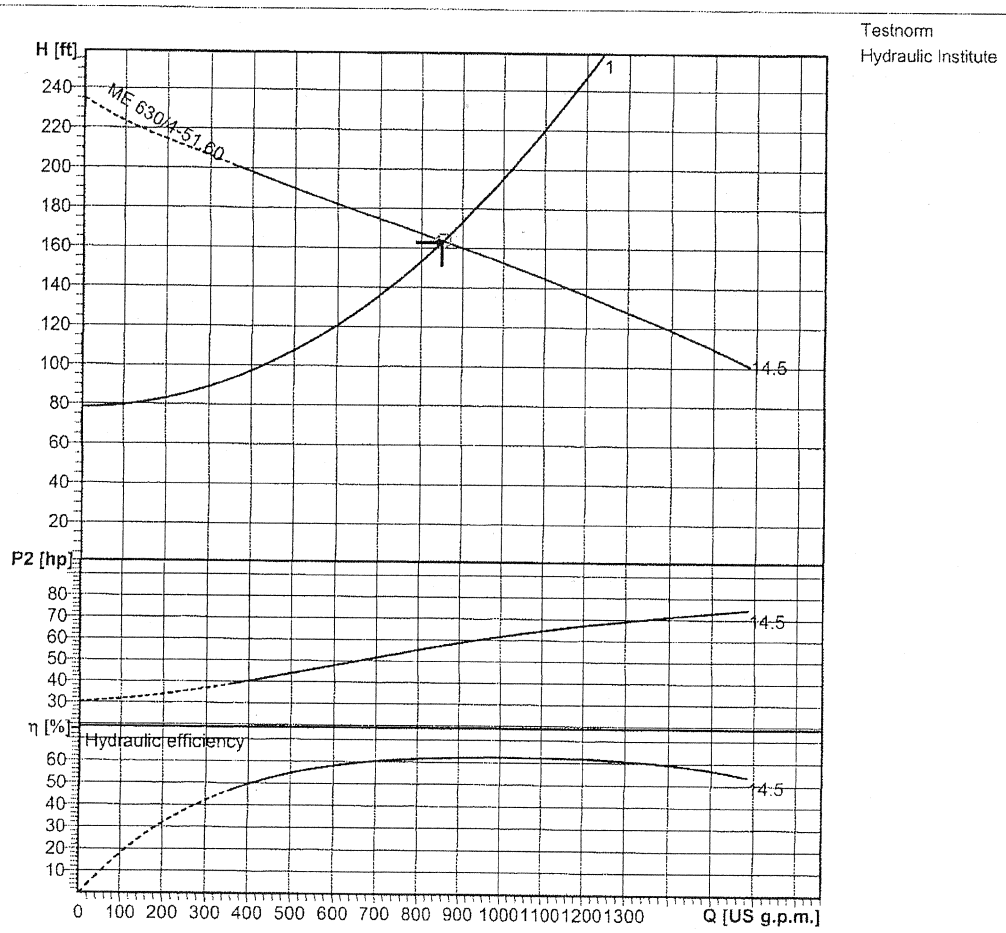

Operating data specification			
Flow	853 US g.p.m.	Head	164 ft
Static head	78.5 ft	Efficiency	62 %
Shaft power	57.1 hp	NPSH	11.9 ft
Fluid	Water	Temperature	39 °F
Nature of system	Single head pump	No. of pumps	1
Pump data			
Type	AFP 1002 60 HZ	Make	ABS
Series	AFP M4-M9 (18,5kW-1MW)	Impeller	1-vane channel impeller
N° of vanes	1	Impeller size	14.5 inch
Free passage	3 1/8"	Suction port	--
Discharge port	DN100		
Motor data			
Rated voltage	460 V	Frequency	60 Hz
Rated power P2	84.5 hp	Nominal speed	1770 rpm
Number of poles	4	Efficiency	93.5 %
Power factor	0.88	Rated current	96.1 A
Starting current	624 A	Rated torque	251 lbf ft
Starting torque	476 lbf ft	Degree of protection	IP68
Insulation class	F		

ABS reserves the right to change any data and dimensions without prior notice and can not be held responsible for the use of information contained in this software.

Pump performance curves
AFP 1002 60 HZ

				Curve number
				Reference curve AFP 1002
			Discharge DN100	Frequency 60 Hz
Density 62.43 lb/ft³	Viscosity 0.0000169 ft²/s	Testnorm Hydraulic Institute	Rated speed 1775 rpm	Date 2007-12-24
Flow 853 US g.p.m.	Head 164 ft	Rated power 57.1 hp	Hydraulic efficiency 62 %	NPSH 11.9 ft

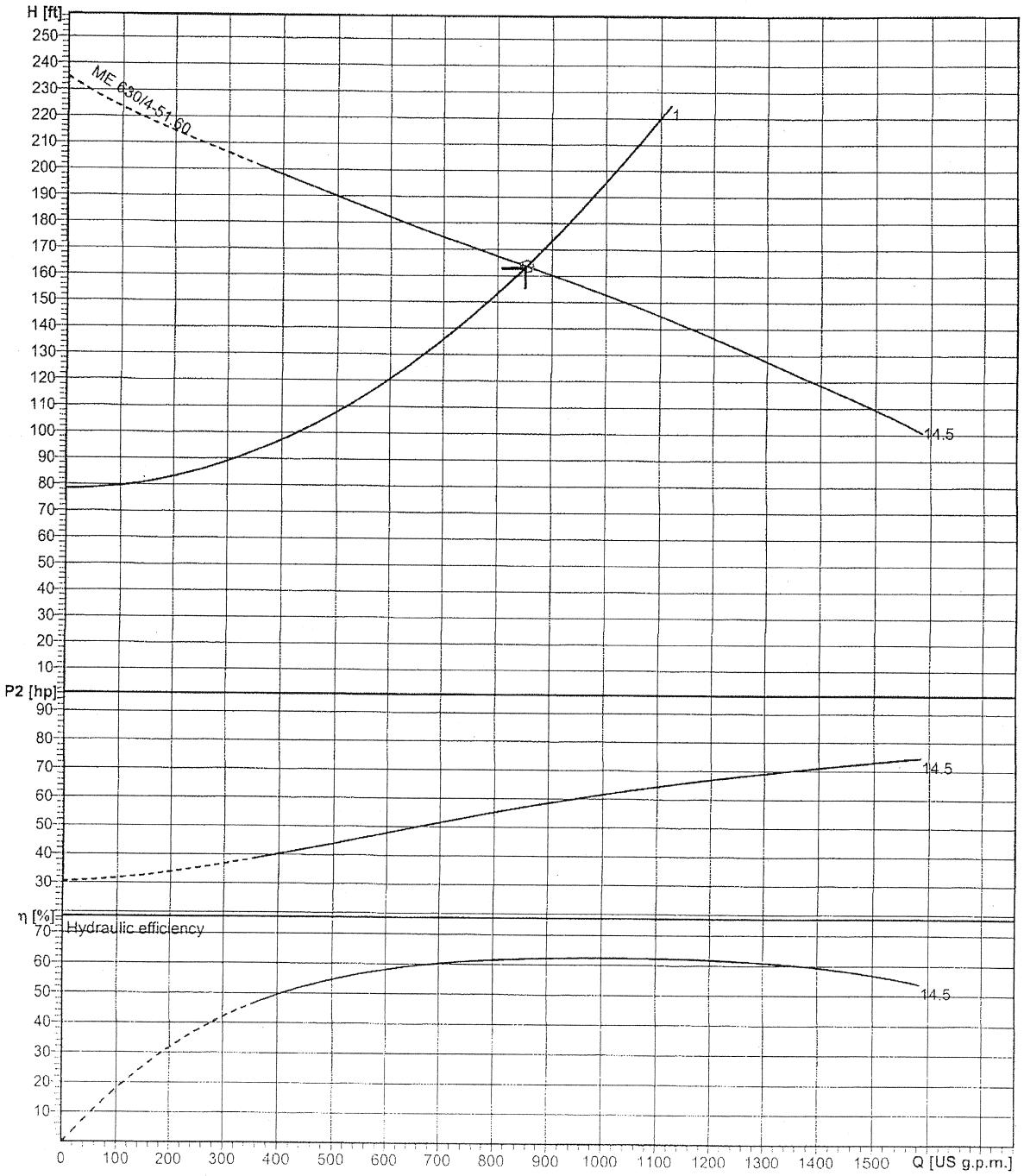

Impeller size 14.5 inch	N° of vanes 1	Impeller 1-vane channel impeller	Solid size 3 1/8"	Revision 2007-09-19

ABS reserves the right to change any data and dimensions without prior notice and can not be held responsible for the use of information contained in this software.

ATTACHMENT E-2

Vertical Turbine Pump Cut Sheets

Pump Performance Datasheet

Customer	: REINER PUMP SYSTEMS, INC.	Quote number	: 42464
Customer reference	:	Pump size	: 12DKH
Item number	: 003	Stages	: 7
Service	: 850 GPM @ 156 FT TDH	Based on curve number	: 12DKH 1170 Rev. 0
Quantity of pumps	: 1	Date last saved	: 04 Oct 2007 12:17 PM

Operating Conditions

Flow, rated	: 850.0 USgpm
Head, rated (requested)	: 156.0 ft
Head, rated (actual)	: 156.4 ft
Suction pressure, rated / max	: 0.00 / 0.00 psi.g
NPSH available, rated	: Ample
Frequency	: 60 Hz

Liquid

Liquid type	: Water - Clean
Additional liquid description	:
Solids diameter, max	: 0.00 in
Temperature, max	: 68.00 deg F
Fluid density, rated / max	: 0.998 / 0.998 SG
Viscosity, rated	: 1.00 cP
-	:

Performance

Pump speed, rated	: 1,170 rpm
Impeller diameter, rated	: 7.63 in
Impeller diameter, maximum	: 7.81 in
Impeller diameter, minimum	: 6.13 in
Efficiency (bowl / pump)	: 83.53 / 82.91 %
NPSH required / margin required	: 7.75 / 0.00 ft
Specific speed / Suction specific speed	: 3,045 / 7,395 US units
MCSF	: 225.3 USgpm
Head, maximum, rated diameter	: 261.3 ft
Head rise to shutoff	: 67.40 %
Flow, best eff. point (BEP)	: 801.0 USgpm
Flow ratio (rated / BEP)	: 106.11 %
Diameter ratio (rated / max)	: 97.59 %
Head ratio (rated dia / max dia)	: 93.40 %
Viscous coefficients (CQ / CH / CE)	: 1.00 / 1.00 / 1.00
Selection status	: Acceptable

Material

Material requested	: Auto
Material selected	: Cast Iron/Bronze

Pressure Data

Maximum working pressure	: 113.1 psi.g
Maximum allowable working pressure	: 380.0 psi.g
Maximum allowable suction pressure	: N/A
Hydrostatic test pressure	: N/A

Driver & Power Data

Driver sizing specification	: Maximum power
Margin over specification	: 0.00 %
Service factor	: 1.15
Power, hydraulic	: 33.42 hp
Power (bowl / pump)	: 40.01 / 40.20 hp
Power, maximum, rated diameter	: 40.26 hp
Minimum recommended motor rating	: 50.00 hp / 37.29 kW

Bowl performance. Corrected for construction and viscosity.

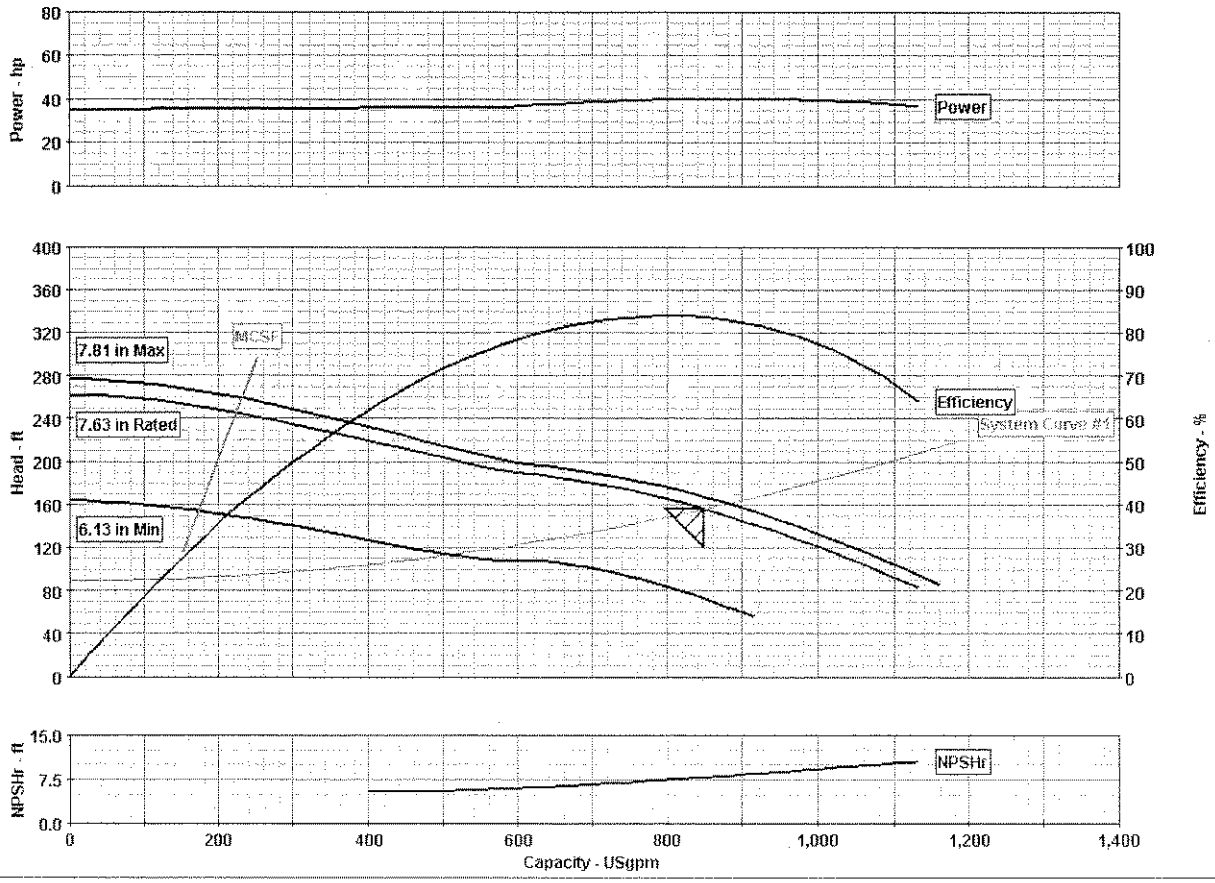

Customer Price Sheet

Customer:	REINER PUMP SYSTEMS, INC.	Date:	04 Oct 2007	
Project Name:	Joppatown, MD	Quote No.:	42464	Rev.: A
Item Number:	003			
Service:	850 GPM @ 156 FT TDH			
Pump Type:	Sump Pump			

Totals

Unit Price	-----
Unit Freight	--- (NOT included in Unit Price)
Quantity	1
Total Price (less frt.)	-----
Grand Total (incl. frt.)	-----

Conditions

Condition Point:	850.0 USgpm@ 156.0 ft TDH
Pumpage:	Water - Clean
Specific Gravity	0.998 SG
Temperature	68.00 deg F
Pump Speed:	1,170 rpm
Overall Pump Length:	9.50 ft

Pump

Qty	Description
1	*Units - 12DKH - 7 stage Product lube - Sump Pump*
	Product lube
	12DKH bowl assembly - 7 stage
	Cast iron bowls (ASTM A48 cl 30-enamel lined)
	Flanged bowls
	Bowl bolting - 304SS (ASTM F593 Gr CW1)
	Bronze impellers (ASTM B584-90b Alloy 838)
	Finished Impellers
	Steel collets (ASTM A108-90a Gr 1215)
	Bowl shaft 1.6875"
	416SS bowl shaft (ASTM A582-88a Type 416)
	Bronze bowl bearings (ASTM B505-91 Alloy 932)
	Suction bell
	Clip on basket strainer 12DK
	Strainer material - Galvanized steel
	Bowls fully assembled
	Column 8" - (0- 20' and 0- 10' and 0- 5' and 1 - 1.63' Top)
	Column pipe ASTM A53 Gr. B rolled and welded steel
	Schedule 30 column pipe .277" wall thickness
	Threaded
	Lineshaft 1"
	416SS lineshaft (ASTM A582-88a Type 416)
	416SS lineshaft coupling (ASTM A582-88a Type 416)
	Neoprene line shaft bearings (Qty 0 per pump)
	Discharge head material - Steel (A516-Gr 70 plt, A105 flg, A53-Gr B pipe)
	8x12 "F" Discharge head
	150# flange (Stl. std.)
	Standard stuffing box
	416SS Top line shaft (ASTM A582-88a Type 416)

Customer Price Sheet

Customer:	REINER PUMP SYSTEMS, INC.	Date:	04 Oct 2007		
Project Name:	Joppatown, MD	Quote No.:	42464	Rev.:	A
Item Number:	003				
Service:	850 GPM @ 156 FT TDH				
Pump Type:	Sump Pump				

Pump

Qty	Description
	Bronze stuffing box bearing (ASTM B505-91 Alloy 932)
	Coupling guard for 12" discharge head
	Aluminum coupling guard
	Non witnessed hydrotest - bowl assembly - 1 units
	Hydrotest report
	Documentation - loose
	Std. paint - Discharge head, exterior only
	Sherwin Williams KEM AQUA 70P - Red Oxide - Column, exterior only
	Sherwin Williams KEM AQUA 70P - Red Oxide - Bowls, exterior only
	Factory assembled (bowl, head, and column only)
	Domestic packaging
	Standard shipping mode

Driver

Qty	Description
1	Driver type - Motor
	US 50HP 230-460v/3ph/60hz 1200 RPM WPI
	Premium efficient
	Vertical hollow shaft motor
	High thrust
	Motor bearing life - 1 yr. min. / 5 yr. average
	Motor enclosure WPI
	Motor service factor 1.15
	Across the line starting
	Motor BD 12 in.
	Non-reverse coupling on motor
	Motor suitable for elevation <= 3300'
	Motor suitable for ambient temperature <= 104 F (40 C)
	Not UL labeled
	Motor domestic packaging
	Motor NOT to be shipped to Floway factory

Multi-Speed Performance Curve

Bowl performance. Corrected for construction and viscosity.

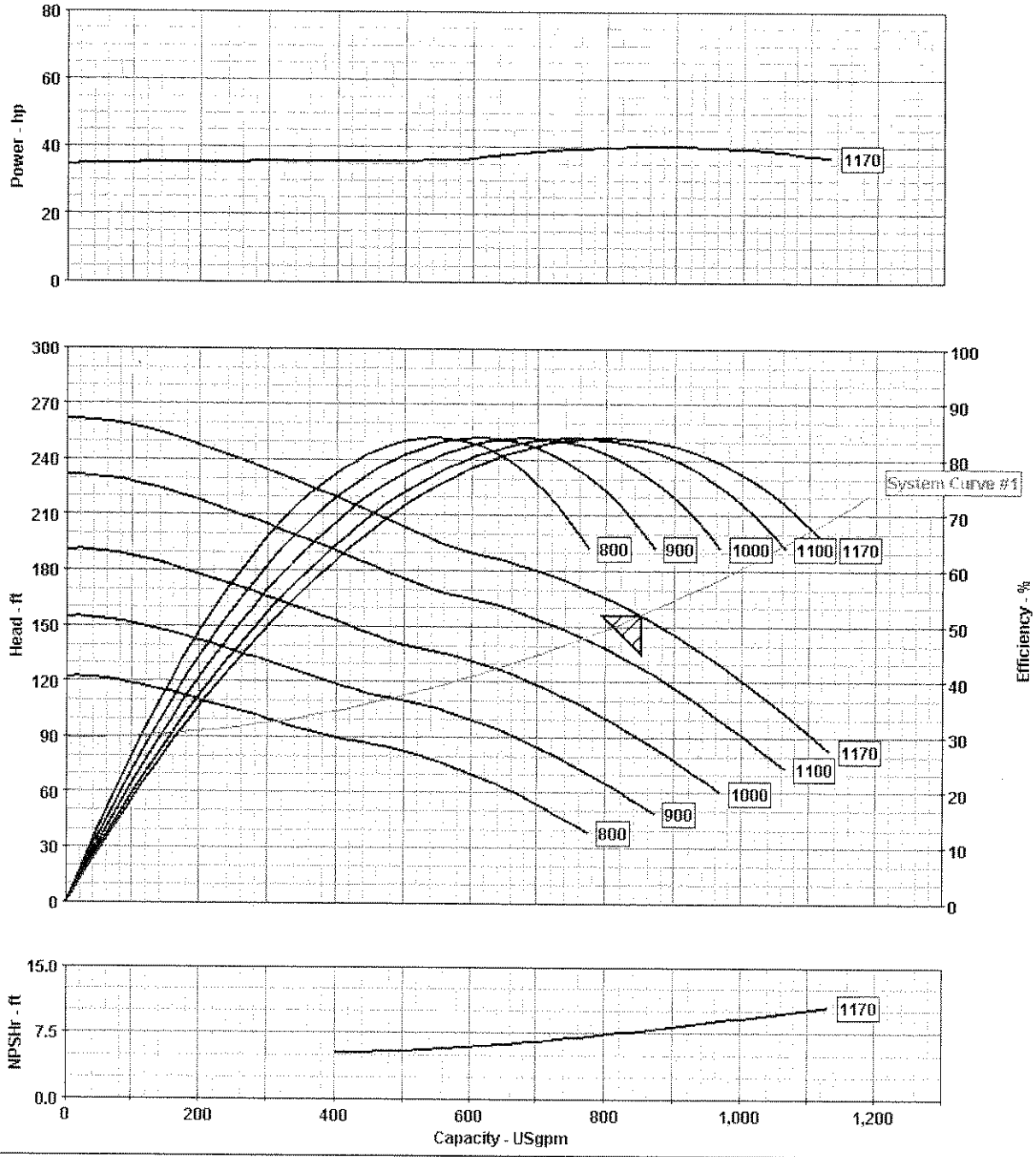

Customer	: REINER PUMP SYSTEMS, INC.	Pump size	: 12DKH
Customer reference	:	Stages	: 7
Item number	: 003	Pump speed, rated	: 1,170 rpm
Service	: 850 GPM @ 156 FT TDH	Based on curve number	: 12DKH 1170 Rev. 0
Quantity of pumps	: 1	Flow, rated	: 850.0 USgpm
Quote number	: 42464	Head, rated	: 156.0 ft
Date last saved	: 04 Oct 2007 12:17 PM	Fluid density, rated / max	: 0.998 / 0.998 SG
-	:	Viscosity	: 1.00 cP
-	:	CQ / CH / CE	: 1.00 / 1.00 / 1.00
-	:	Impeller diameter, rated	: 7.63 in

VERTICAL TURBINE PUMP

850.0 USgpm 156.0 ft TDH
7 STAGE TYPE 12DKH
8x12F DISCHARGE HEAD

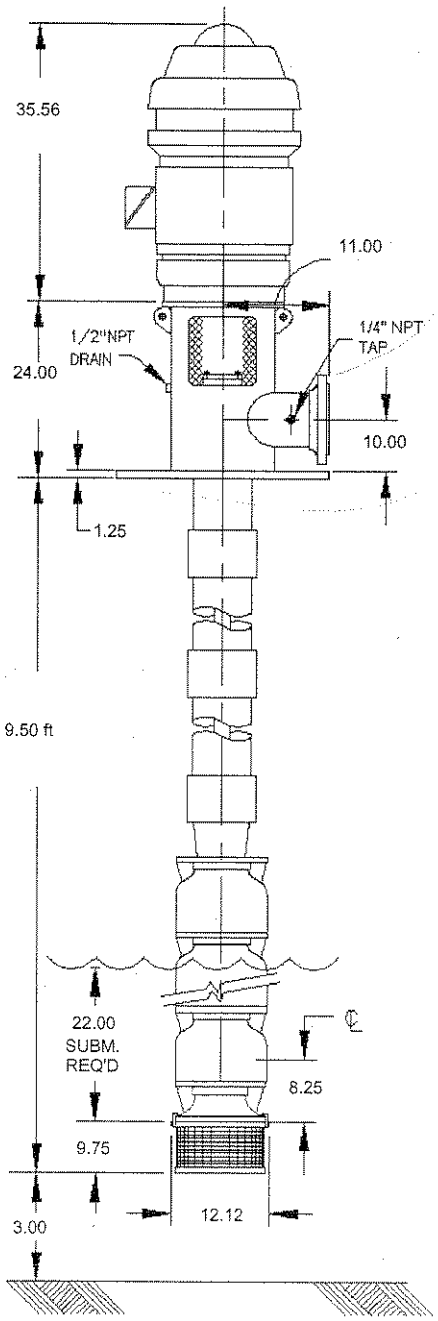

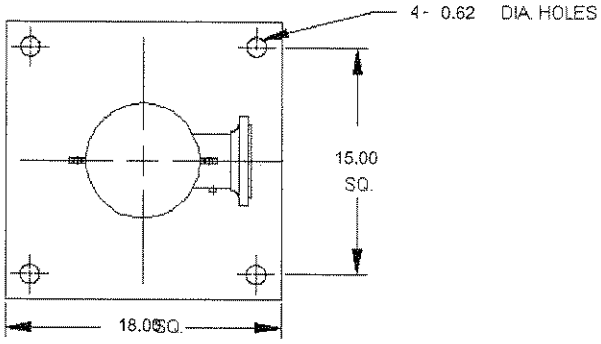

Discharge

8 in. 150#RF - ANSI Flange
13.5 in. Dia. Flange
8 - .88 in. Dia. holes
11.75 in. Bolt circle

NOTES:
ALL DIMENSIONS IN INCHES UNLESS OTHERWISE NOTED.
DRAWING NOT TO SCALE.
NOT TO BE USED FOR CONSTRUCTION UNLESS CERTIFIED.

REV.	BY	DATE	DESCRIPTION

Customer: REINER PUMP SYSTEMS, INC.
Customer Reference:
Item Number: 003
Curve Number: 12DKH 1170
Date: 04 Oct 2007

OUTLINE DRAWING

DRAWING

ATTACHMENT E-3

Vacuum Primed/Suction Lift Pump Cut Sheet

Pump Curve

Smith & Loveless Inc.

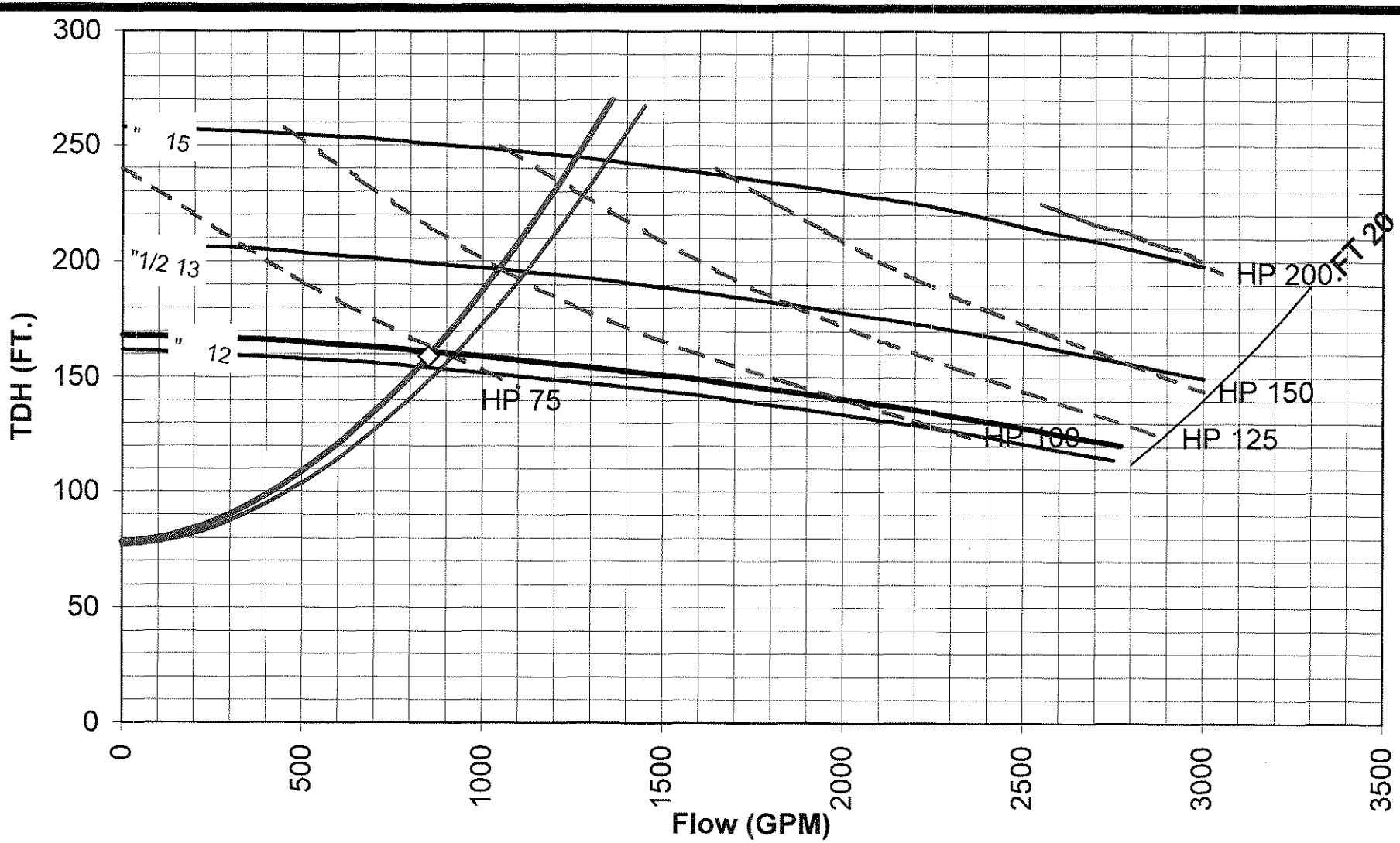

Location: Maryland
Project Name: Hartford County

Design Point: 850 GPM@ 159'
Impeller Trim: 12 1/4 "

Pump Model: 8D4V, 1760 RPM
HP & Efficiency: 100Hp & 46.9%

Engineering Order

Smith & Loveless Inc.
14040 Santa Fe Trail Drive • Lenexa, Kansas 66215-1284 • Ph: 913-888-5201 • Fax: 913-888-2173 • answers@smithandloveless.com

Classic Duplex Wet Well Mounted Pump Station Engineering Order

Location:	Maryland	**Engineer:**	HDR
Purchaser:		**Project:**	Hartford County
Prepared By:	Michael P. Whelan	**Inquiry #:**	

Type of Pumps: 8D4V Number of Pumps: 2 Wet Well Diameter: 8' - 0"

Suction Pipe Size: 8" Discharge Valve Size: 8" Common Discharge Pipe Size: 8"

Electrical Service Data 3 Phase 60 Cycle 460 Volts

120 Volt Single Phase Available No 120 Volt Single Phase Transformer Required 5 KVA Transformer

Wiring Diagram Control Panel Data Type U.L. NEMA 1

PUMP DATA			PUMP 1	PUMP 2	PUMP 3	PUMP 4
Design Characteristics (GPM@TDH)			850@159	850@159	XXXXXX	XXXXXX
Pump Model			8D4V	8D4V	XXXXXX	XXXXXX
Impeller Diameter			12 1/4"	12 1/4"	XXXXXX	XXXXXX
Rotation			CW	CCW	XXXXXX	XXXXXX
Mechanical Seal Size			3 "	3 "	XXXXXX	XXXXXX
Static Suction Lift					XXXXXX	XXXXXX
Pump Serial Number						
Motor Serial Number (Code Letter)						
MOTOR DATA						
Motor Horsepower			100	100	XXXXXX	XXXXXX
Motor RPM			1760	1760	XXXXXX	XXXXXX
MOTOR CONTROL EQUIPMENT						
Circuit Breaker Trip Rating	***	Amps	SPECIAL	SPECIAL	XXXXXX	XXXXXX
Magnetic Starter	Size	NEMA 4	4L421E	4L421E	XXXXXX	XXXXXX
O.L. Coil Number						

LEVEL CONTROL	Relay Logic	TYPE: Float Switch			INDICATION:	Local	
		Pumps Off	Low Level	Second Level	High Level	Low Level Alarm	High Level Alarm
S&L Part Number		4L291A	4L291A	XXXXXX	4L291A	XXXXXX	4L291A
High Level Actuation		XXXXXX	7.2	XXXXXX	7.7	XXXXXX	8.2
Low Level Actuation		1.5	XXXXXX	XXXXXX	XXXXXX	XXXXXX	XXXXXX

Smith & Loveless, Inc.

Classic Duplex Wet Well Mounted Pump Station Engineering Order

Standard Equipment

Relay Logic Controls
Automatic Alternator
Vacuum Priming System with Sonic Start
Prime Mode Selector-Constant or On-Demand
Control Circuit Breakers
Ventilating Fan & Heater with Thermostats
Spare S&L Mechanical Seal & Volute Gaskets
Duplex GFI Protected Convenience Outlet

Pre-Engineered Options

- [x] High Water Alarm
- [x] Vapor Proof Light 120 VAC
- [ ] Weatherproof Horn
- [ ] Weatherproof Bell
- [ ] Operator Assistance
- [ ]
- [ ] Phase Monitor Relay
- [ ] Single Phase Power Failure Relay
- [ ] Pump Failure Alarm Relays
- [ ] Unauthorized entry
- [ ]
- [ ] 0 Mounted Alarm Silence Switch
- [ ] Prime Failure Alarm Relays
- [ ] Trickle Charger
- [ ] Remote Alarm Panel
- [x] Time Delay Relay
- [x] Auxiliary Heater
- [x] NEMA Starters
- [ ] Auto/Base 1/Base 2 Selector Switch
- [ ] Lightning Arrestor
- [ ] Surge Capacitor
- [x] Run Time Meter Individual
- [ ] Intrinsically Safe Displacement Switch Relays
- [ ] Pump Running Lights
- [ ]
- [ ] Generator Interlock Relay
- [ ] Immersible Motors with Station Flooding Alarm
- [ ] Super Duty Motors

- [ ] Low Water Alarm
- [ ] Add-A-Phase Converter Relay
- [ ] Roto-Phase Converter Relay
- [ ] Terminal Test Strip
- [ ] Main Circuit Breaker
- [ ] Sequential Alternator
- [x] 5 KVA Transformer
- [ ] Wet Well Basket & Winch
- [ ] Wet Well Vent Blower
- [ ]
- [x] Compound Pressure Gauges
  - Scale: 0-100 PSI
  - [ ] Each Pump/Pumpset
  - [ ] Standard
  - [x] Protected
  - [x] Glycerin Filled
- [ ] Tool Kit
- [ ] Special Panel Encl. - 0
- [ ] Certified Pump Test Curves
- [x] U.L. Labeled Panel
- [ ]
- [x] Insulated Hood
- [ ]
- [ ]
- [ ]
- [ ]
- [ ]
- [ ] Qty.
- [ ] Add'l Spare Mechanical Seal(s) (One Std.)

Smith & Loveless, Inc.

Classic Duplex Wet Well Mounted Pump Station Engineering Order

Item #	Description
1	Station shall be sized to fit over a 6'-0" diameter opening in a 8'-0" diameter Wet Well.

WET WELL ELEVATIONS AND DIMENSIONS

Location: Maryland **Project Name: Hartford County**

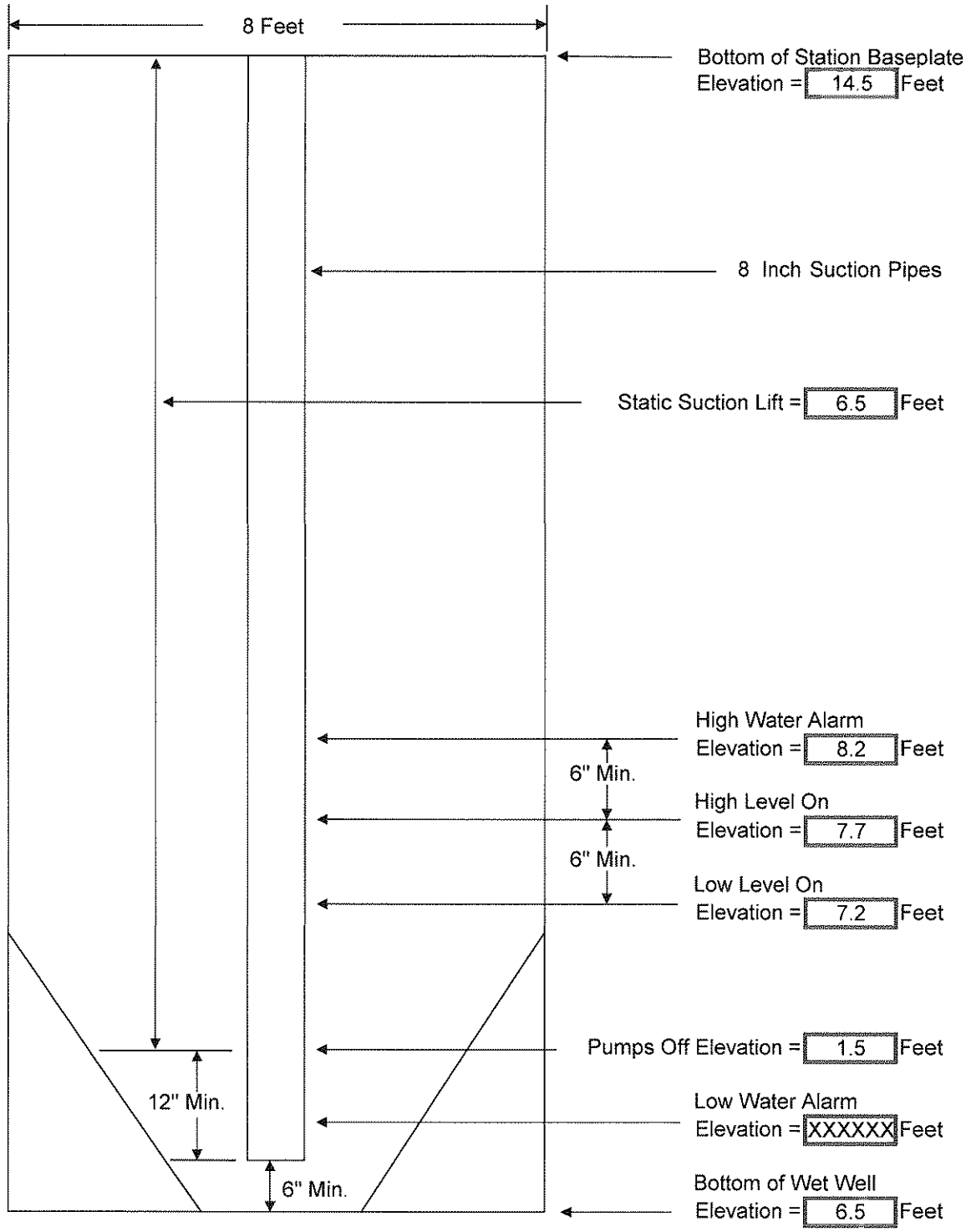

(Drawing Not to Scale)

Calculations

Smith & Loveless Inc.

Location: Maryland | **Project Name: Hartford County**
Engineer: HDR | **Date: 10-Dec-07**

System Head Calculations

Definitions:

TDH:	Total Dynamic Head
Static Head:	The difference in the water surface elevation from the "pumps off" level setting to the discharge of the force main measured in feet.
Fiction Losses:	The losses associated with the movement of a fluid through a pipe measured in feet of head.
Station Losses:	The losses associated with the movement of a fluid through the Smith & Loveless pumping station measured in feet of head.
Q:	Rate of fluid flow in Gallons per minute
FMD:	Inside diameter of forcemain in inches
SPD:	Inside diameter of the station piping in inches
C-Factor:	A constant accounting for surface roughness.
FML:	Forcemain Length in feet
SEL:	Station equivalent length in feet of pipe.

Given:

TDH = Static Head + Friction Losses + Station Losses

Static Head (max):	79 FT.
Static Head (min):	77 FT.
Q:	850 GPM
FMD:	10"
FML:	19500 FT.
C-Factor 1:	140
C-Factor 2:	150
SPD:	8"
SEL:	103 FT. (For a 8D4V Duplex WWMPS with 8"station piping per station manufacturer.)

For a C-factor of 140, we proceed as follows:

Since the Static Head is given, we proceed with Friction Loss

Friction Loss Calculation:

C-factor: 140

$$\text{Friction Losses} = \left(\frac{FML}{100}\right) X \left(.2083 X \left(\left(\frac{100}{C\text{-Factor}}\right)^{1.85} \left(\frac{Q^{1.85}}{FMD^{4.866}}\right)\right)\right)$$

Substituting in known values yields:

$$\text{Friction Losses} = \left(\frac{19500}{100}\right) X \left(.2083 X \left(\left(\frac{100}{140}\right)^{1.85} \left(\frac{850^{1.85}}{10^{4.866}}\right)\right)\right)$$

$$=> \left(195\right) X \left(.2083 X \left(\left(0.71\right)^{1.85} \left(\frac{262,679}{73,367}\right)\right)\right)$$

$$=> \left(195\right) X \left(.2083 X \left(0.5366 X \left(3.580\right)\right)\right)$$

$$=> \left(195\right) X \left(.2083 X \left(1.9213\right)\right)$$

$$=> 78.04$$

Station Loss Calculation:

C-Factor: 100

$$\text{Friction Losses} = \left(\frac{SEL}{100}\right) X \left(.2083 X \left(\left(\frac{100}{100}\right)^{1.85} \left(\frac{Q^{1.85}}{SPD^{4.866}}\right)\right)\right)$$

Substituting in known values yields:

$$\text{Friction Losses} = \left(\frac{103}{100}\right) X \left(.2083 X \left(\left(\frac{100}{100}\right)^{1.85} \left(\frac{850^{1.85}}{8^{4.866}}\right)\right)\right)$$

$$=> \left(1.03\right) X \left(.2083 X \left(\left(1\right)^{1.85} \left(\frac{262,679}{24,773}\right)\right)\right)$$

$$=> \left(1.03\right) X \left(.2083 X \left(1 X \left(10.603\right)\right)\right)$$

$$=> \left(1.03\right) X \left(.2083 X \left(10.6033\right)\right)$$

$$=> 2.275$$

Using the static head of 78.5 feet given, we substitute and solve for TDH as follows:

TDH = Static Head + Friction Losses + Station Losses

C-factor: 140

TDH = 78.5 + 78.04 + 2.27

TDH = 158.81 Feet of water

For a C-factor of 150, we proceed as follows:

Since the Static Head is given, we proceed with Friction Loss

Friction Loss Calculation:

C-factor: 150

$$\text{Friction Losses} = \left(\frac{FML}{100}\right) X \left(.2083 X \left(\left(\frac{100}{150}\right)^{1.85} \left(\frac{Q^{1.85}}{FMD^{4.866}}\right)\right)\right)$$

Substituting in known values yields:

$$\text{Friction Losses} = \left(\frac{19500}{100}\right) X \left(.2083 X \left(\left(\frac{100}{150}\right)^{1.85} \left(\frac{850^{1.85}}{10^{4.866}}\right)\right)\right)$$

$$=> \left(195\right) X \left(.2083 X \left(\left(0.67\right)^{1.85} \left(\frac{262,679}{73,367}\right)\right)\right)$$

$$=> \left(195\right) X \left(.2083 X \left(0.4723 X \left(3.580\right)\right)\right)$$

$$=> \left(195\right) X \left(.2083 X \left(1.691\right)\right)$$

$$=> 68.69$$

Station Loss Calculation:

C-Factor: 100

$$\text{Friction Losses} = \left(\frac{SEL}{100}\right) X \left(.2083 X \left(\left(\frac{100}{100}\right)^{1.85} \left(\frac{Q^{1.85}}{SPD^{4.866}}\right)\right)\right)$$

Substituting in known values yields:

$$\text{Friction Losses} = \left(\frac{103}{100}\right) X \left(.2083 X \left(\left(\frac{100}{100}\right)^{1.85} \left(\frac{850^{1.85}}{8^{4.866}}\right)\right)\right)$$

$$=> \left(1.03\right) X \left(.2083 X \left(\left(1\right)^{1.85} \left(\frac{262,679}{24,773}\right)\right)\right)$$

$$=> \left(1.03\right) X \left(.2083 X \left(1 X \left(10.603\right)\right)\right)$$

$$=> \left(1.03\right) X \left(.2083 X \left(10.6033\right)\right)$$

$$=> 2.275$$

Using the static head of 77 feet given, we substitute and solve for TDH as follows:

TDH = Static Head + Friction Losses + Station Losses

C-factor: 150

TDH = 77 + 68.69 + 2.27

TDH = 147.96 Feet of water

Wet Well Volume Calculations

Q => Flow Rate
D => WW Diameter
V => Volume between LL "Off" and LL "On" elevations
H => Height between LL"Off" and LL "On" elevations
F => Volume multiplier based upon motor starting limits as defined by Smith & Loveless

Given:

Q = 850
D = 8 FT.
F = 2.5
π = 3.141593

Solve for Volume

The volume between the LL"Off" setting and the LL "On" setting should be at least 2.5 times the design flow rate.

$$V = Q \times F$$

$$V = \frac{Q \times 2.5}{7.48}$$

$$V = 284.09 \quad Ft.^3$$

Solve for Height

$$V = H \times \pi \times R^2$$

$$R = D/2$$

$$V = H \times \pi \times (D/2)^2$$

$$H = \frac{V \times 4}{\pi \times D^2}$$

$$H = \frac{284.09 \times 4}{\pi \times 64}$$

$$H = \frac{1136.36}{201.062}$$

H = 5.65 Feet

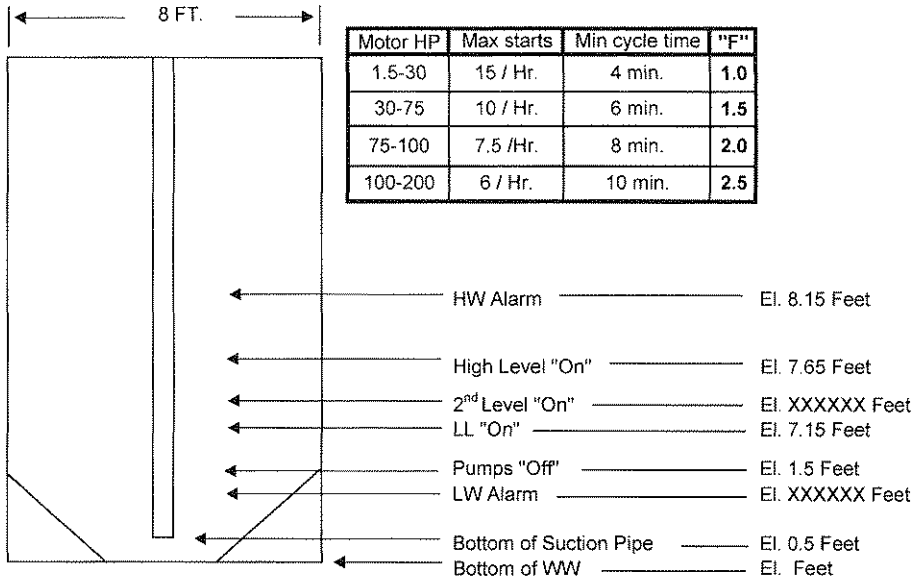

Motor HP	Max starts	Min cycle time	"F"
1.5-30	15 / Hr.	4 min.	**1.0**
30-75	10 / Hr.	6 min.	**1.5**
75-100	7.5 /Hr.	8 min.	**2.0**
100-200	6 / Hr.	10 min.	**2.5**

Wet Well volumes and elevations do not take into account the effect of the sloped bottom. In most cases, this is not significant.

Design Curve

Smith & Loveless Inc.

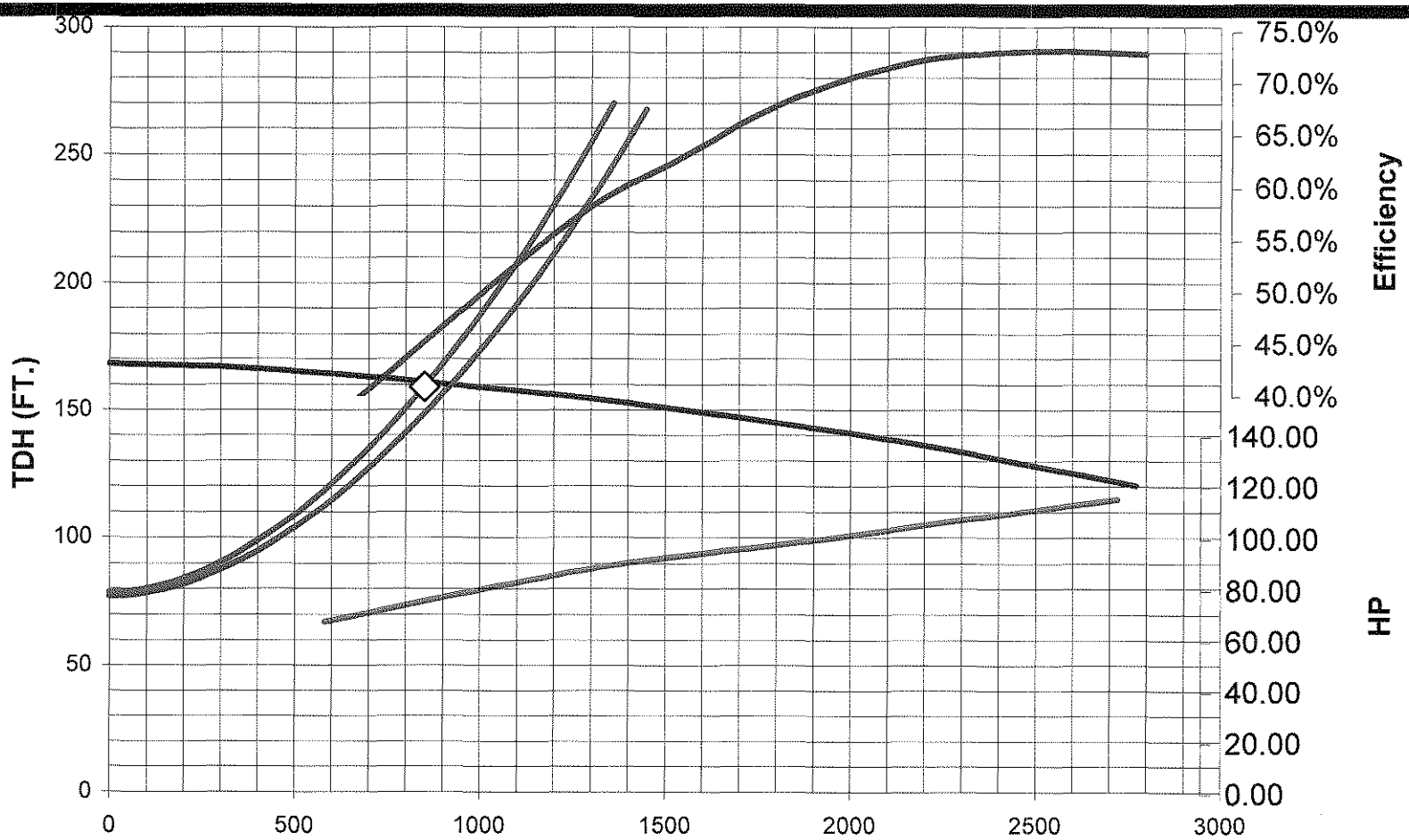

Location:	Maryland	Design Point:	850 GPM@ 159'
Project Name:	Hartford County	Impeller Trim:	12 1/4"
Pump Model:	8D4V, 1760 RPM	HP & Efficiency:	100Hp & 46.9%

ATTACHMENT F

Pump Station Alternative Layouts and Flow Schematics

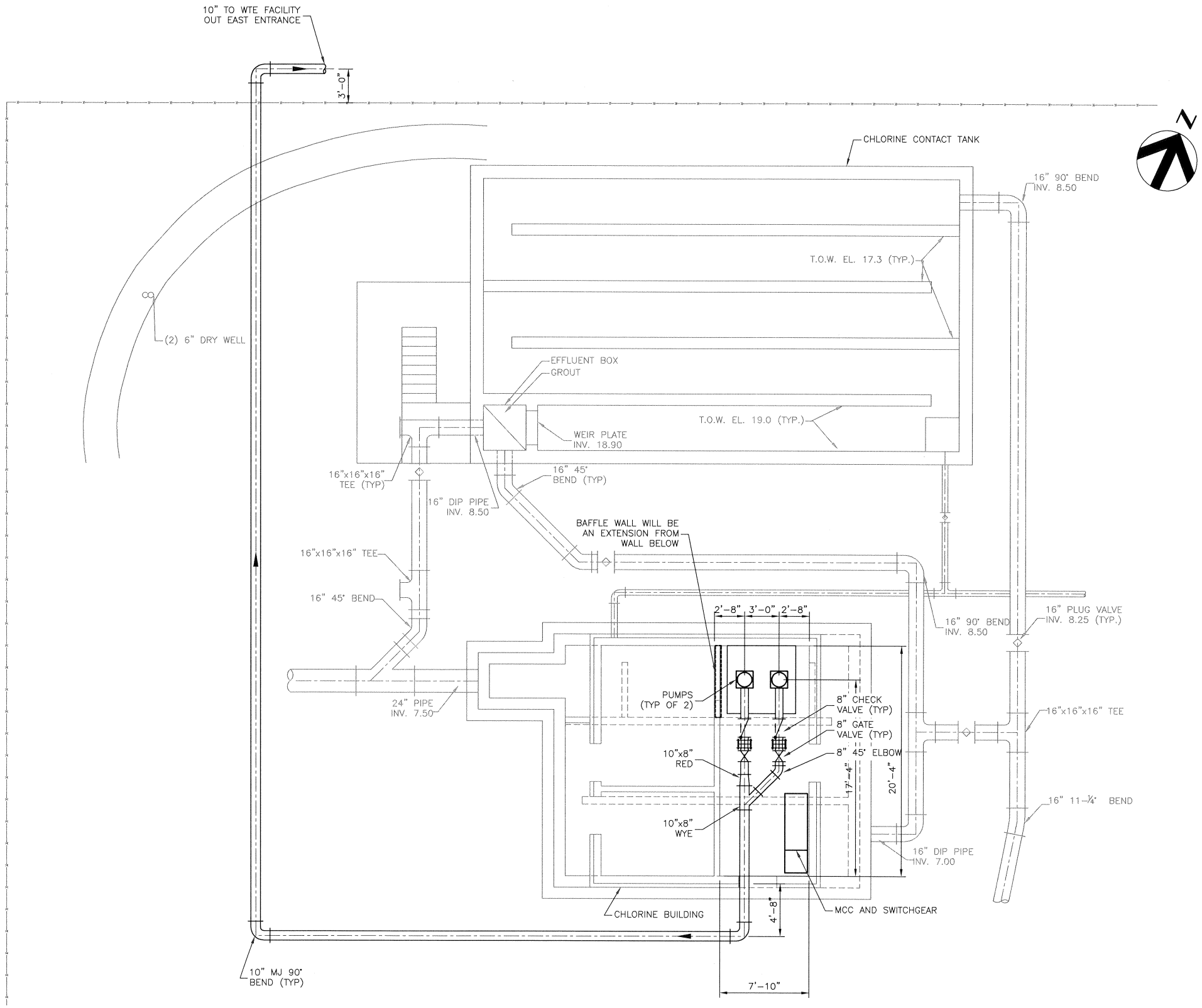

NOTE:

1. THE INFORMATION ON THIS DRAWING IS CREATED FROM A 1997 AS-BUILT CREATED BY STEARNS & WHELER.

2. THE WORK FOR THIS ALTERNATIVE INCLUDES BUT IS NOT LIMITED TO THE FOLLOWING:

A) DEMOLITION AND REMOVAL OF EQUIPMENT IN NORTHEAST ROOM.

B) MOVING ELECTRICAL PANELS AND OTHER EQUIPMENT TO OTHER ROOMS WITHIN BUILDING.

C) CREATION OF NEW 7'-10"x20'-4" ROOM.

D) INSTALLATION OF PUMPS, VALVES AND OTHER PIPING EQUIPMENT.

E) REQUIRES NEW ELECTRICAL AND INSTRUMENTATION EQUIPMENT.

F) MODIFICATION OF THE VERTICAL WALL IN THE WET WELL OF CHLORINE BUILDING TO SERVE AS A BAFFLE WALL.

HDR Engineering, Inc.

Effluent Reuse Study
Northeast Maryland
Waste Disposal Authority
Joppatowne, Harford County, Maryland

DATE
JANUARY 2008

FIGURE
F-1

PUMP STATION
ALTERNATIVE 1

C:\pwxmworking\dms76147\01M-1.01.dwg, Layout1, 1/25/2008 8:14:13 AM, 1:2

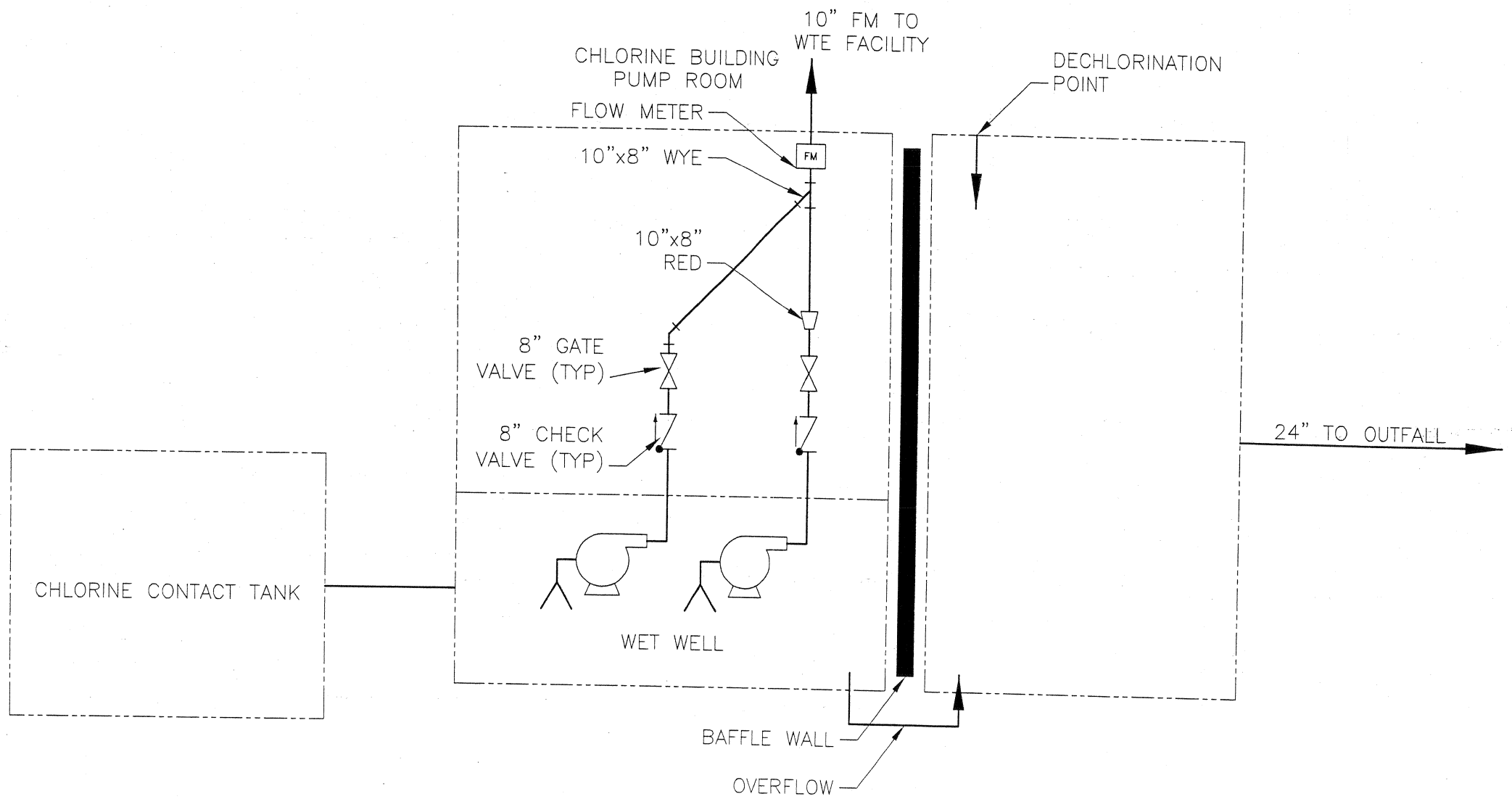

HDR Engineering, Inc.

Effluent Reuse Study
Northeast Maryland
Waste Disposal Authority
Joppatowne, Harford County, Maryland

DATE
JANUARY 2008

FIGURE
F-2

PROCESS FLOW DIAGRAM
ALTERNATIVE 1
RETROFIT EXISTING CHLORINE BUILDING

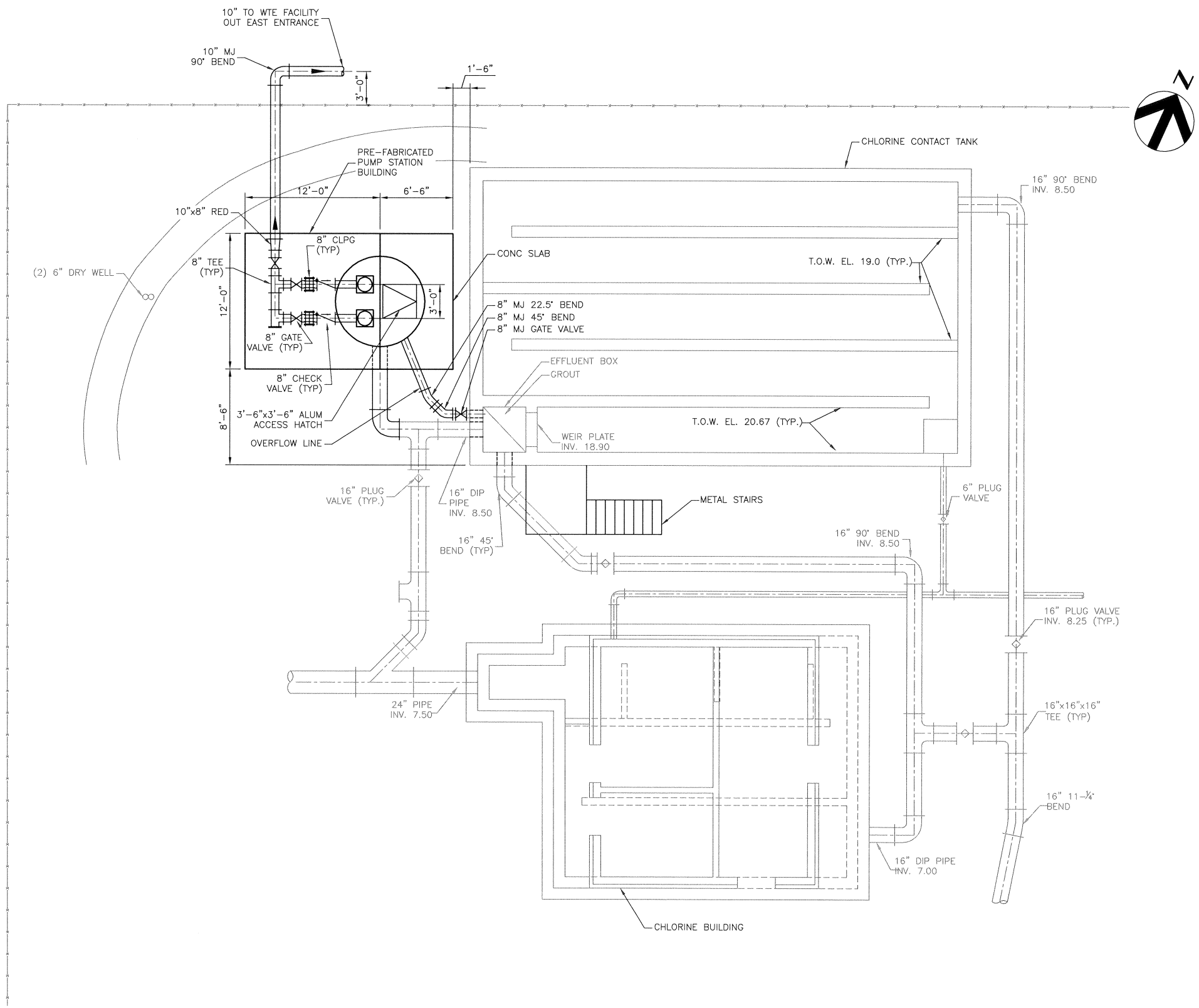

NOTE:

1. THE INFORMATION ON THIS DRAWING IS CREATED FROM A 1997 AS-BUILT CREATED BY STEARNS & WHELER.

2. THE WORK FOR THIS ALTERNATIVE INCLUDES BUT IS NOT LIMITED TO THE FOLLOWING:

A) SITE WORK FOR INSTALLATION OF PRE-FABRICATED BUILDING.

B) MODIFICATIONS TO STORMWATER MANAGEMENT SYSTEM.

C) SEPARATE PURCHASE OF PUMPS, VALVES, ELECTRICAL EQUIPMENT AND INSTRUMENTATION CONTROLS.

D) CHLORINE CONTACT TANK WALL TO BE RAISED 1'-8" TO ACHIEVE 30-MIN CONTACT REQUIREMENTS.

E) STAIRS TO BE MOVED FROM WEST SIDE OF SOUTHWEST CORNER TO SOUTH SIDE OF SOUTHWEST CORNER.

HDR Engineering, Inc.

Effluent Reuse Study
Northeast Maryland
Waste Disposal Authority
Joppatowne, Harford County, Maryland

DATE
JANUARY 2008

FIGURE
F-3

PUMP STATION
ALTERNATIVE 2

C:\pwxmworking\dms76147\01M-1.02.dwg, Layout1, 1/25/2008 8:18:15 AM, 1:2

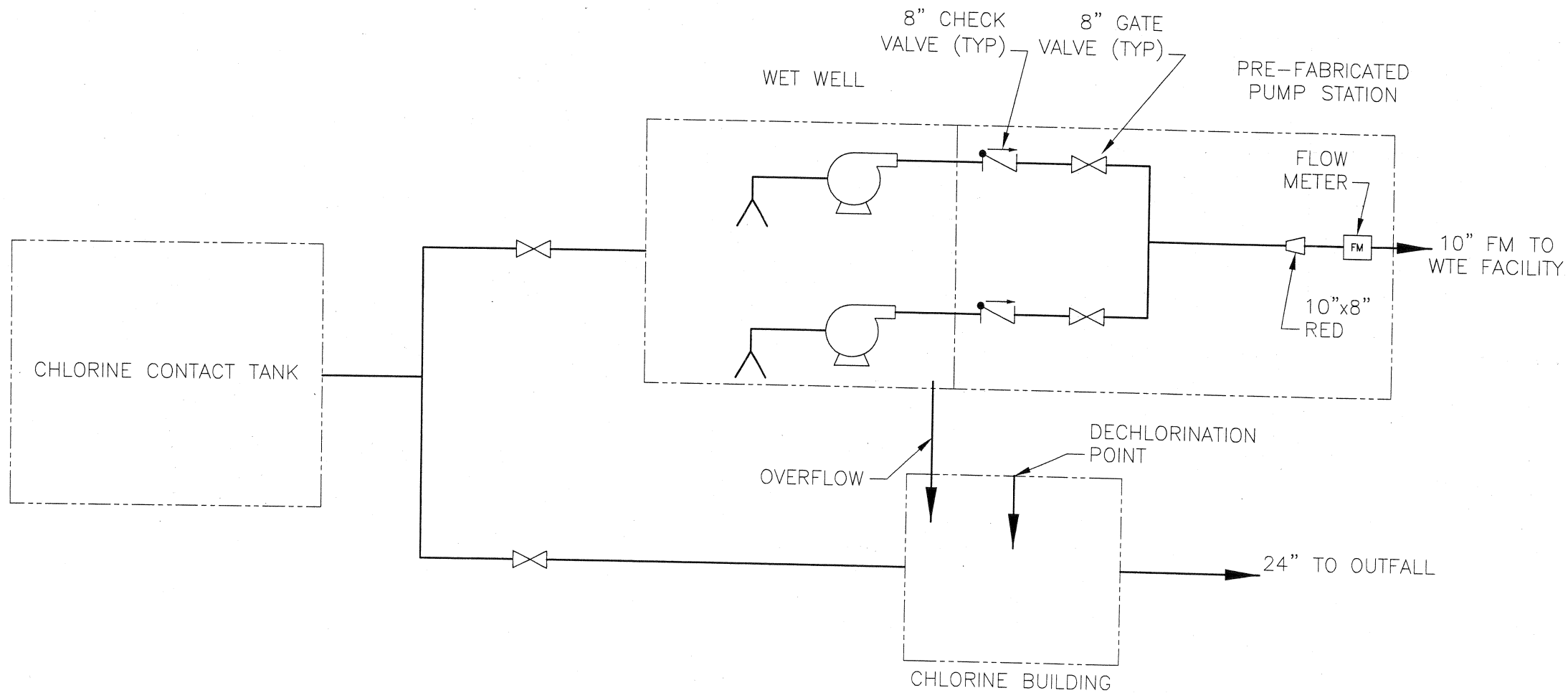

HDR Engineering, Inc.

Effluent Reuse Study
Northeast Maryland Waste Disposal Authority
Joppatowne, Harford County, Maryland

DATE
JANUARY 2008

FIGURE
F-4

PROCESS FLOW DIAGRAM
ALTERNATIVE 2
PRE-ENGINEERED PUMP STATION

C:\pwxnworking\dms76147\01D-1.02.dwg, Layout1, 1/30/2008 2:34:35 PM, 1:2

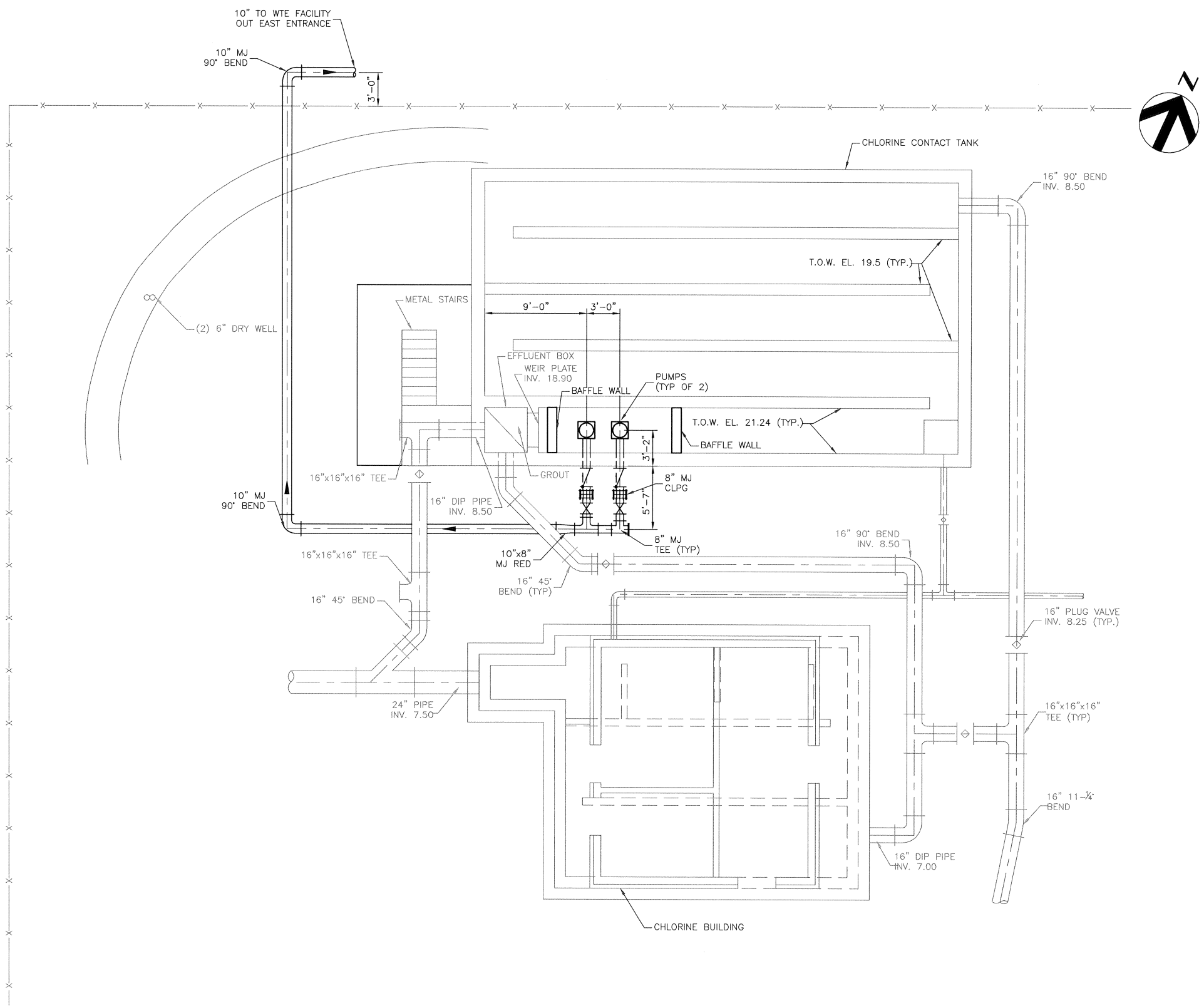

NOTE:

1. THE INFORMATION ON THIS DRAWING IS CREATED FROM A 1997 AS-BUILT CREATED BY STEARNS & WHELER.

2. THE WORK FOR THIS ALTERNATIVE INCLUDES BUT IS NOT LIMITED TO THE FOLLOWING:

A) INSTALL ELECTRICAL PANELS AND INSTRUMENTATION CONTROLS IN THE NORTHEAST ROOM OF THE CHLORINE BUILDING.

B) DEMOLITION AND REMOVAL OF EQUIPMENT IN THE NORTHEAST ROOM.

C) MOVE SEVERAL ELECTRICAL COMPONENTS AND EQUIPMENT TO OTHER ROOMS IN THE CHLORINE BUILDING.

D) CHLORINE CONTACT TANK WALL TO BE RAISED 2'-2" TO ACHIEVE 30-MIN CONTACT TIME REQUIREMENTS.

E) VALVES AND METERS INSTALLED SOUTH OF THE PUMPS TO BE FREE STANDING OR IN ENCLOSURE.

HDR Engineering, Inc.

Effluent Reuse Study
Northeast Maryland
Waste Disposal Authority
Joppatowne, Harford County, Maryland

DATE
JANUARY 2008

FIGURE
F-5

PUMP STATION
ALTERNATIVE 3

C:\pwxmworking\dms76147\01M-1.03.dwg, Layout1, 1/25/2008 8:23:22 AM, 1:2

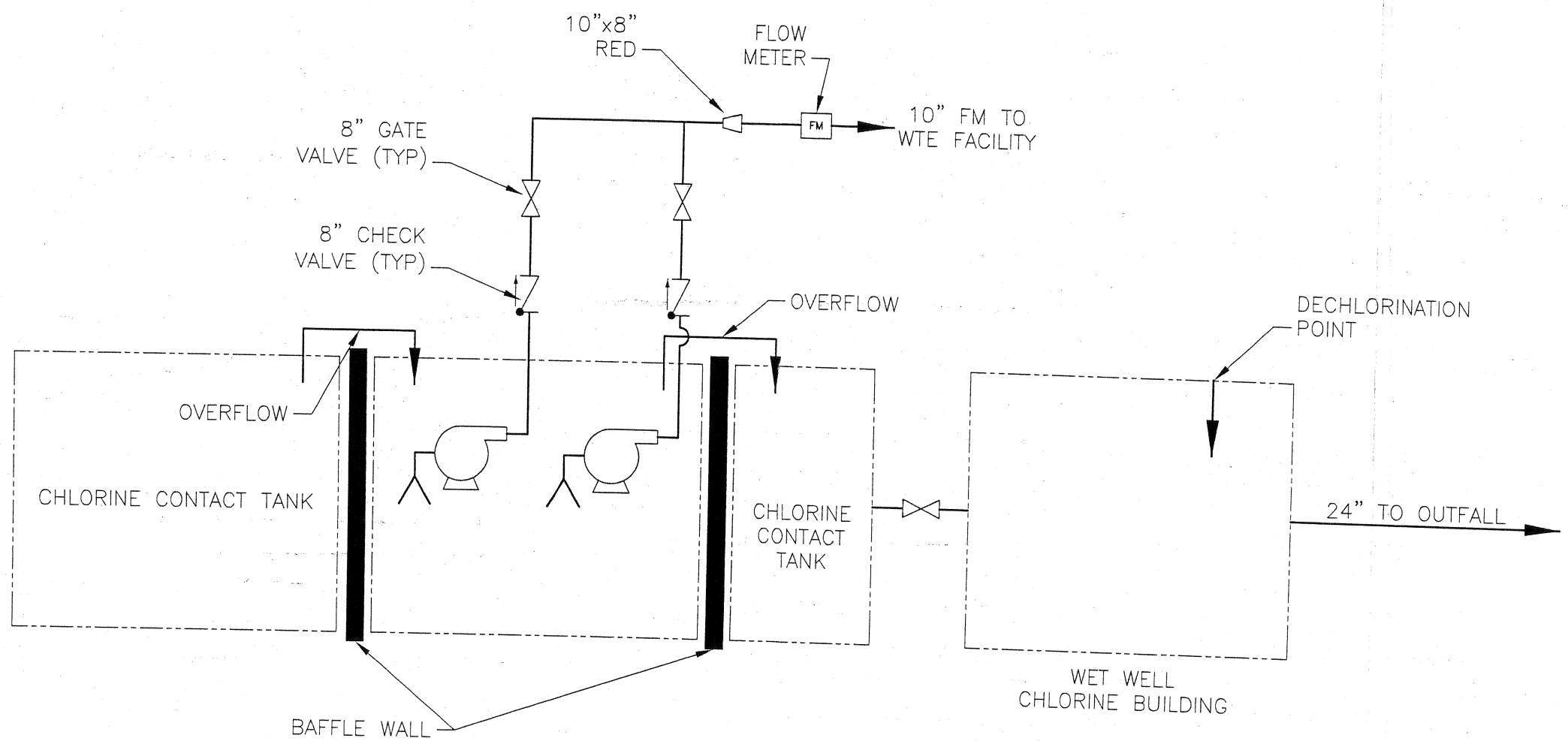

HDR Engineering, Inc.

Effluent Reuse Study
Northeast Maryland
Waste Disposal Authority
Joppatowne, Harford County, Maryland

DATE
JANUARY 2008

FIGURE
F-6

PROCESS FLOW DIAGRAM
ALTERNATIVE 3
RETROFIT EXISTING CHLORINE CONTACT TANK

ATTACHMENT G

Pump Station Alternative Cost Estimate

Pump Station Estimate

PROJECT	67242 Joppatowne, MD WWTP Pump Station
LOCATION	
CATEGORY	
SHEET	1
OF	1
ESTIMATOR	G. Moreno
NO DESIGN COMPLETED / SCHEMATIC DESIGN	
DATE SUBMITTED	
CHECKED BY	W. Lai
FINAL DESIGN / OTHER: _____	
FILENAME	

Retrofit Existing Chlorine Building ALTERNATIVE 1		Cost Labor & Material	
Mechanical		$ 213,000	
Electrical		$ 416,500	
Structural		$ 297,000	
Site Improvements		$ 73,000	
Instrumentation		$ 94,500	
		TOTAL	$1,094,000
General Conditions	10%		$109,400
Overhead	10%		$109,400
Profit	10%		$109,400
Contingency	50%		$547,000
		TOTAL	$1,969,200
Escalation 2 years @ 6% per year	12.36%		$243,393
		TOTAL	$2,212,593

Stand Alone Pump Station - NW Corner of WWTP ALTERNATIVE 2		Cost Labor & Material	
Mechanical		$ 270,000	
Electrical		$ 284,000	
Structural		$ 85,000	
Site Improvements		$ 208,000	
Instrumentation		$ 4,000	
		TOTAL	$851,000
General Conditions	10%		$85,100
Overhead	10%		$85,100
Profit	10%		$85,100
Contingency	50%		$425,500
		TOTAL	$1,531,800
Escalation 2 years @ 6% per year	12.36%		$157,010
		TOTAL	$1,688,810

Add-on to Chlorine Contact Tank ALTERNATIVE 3		Cost Labor & Material	
Mechanical		$ 195,000	
Electrical		$ 457,500	
Structural		$ 125,000	
Site Improvements		$ 76,000	
Instrumentation		$ 94,500	
		TOTAL	$948,000
General Conditions	10%		$94,800
Overhead	10%		$94,800
Profit	10%		$94,800
Contingency	50%		$474,000
		TOTAL	$1,706,400
Escalation 2 years @ 6% per year	12.36%		$210,911
		TOTAL	$1,917,311

Mechanical CD=Crew Day

ALTERNATIVE 1 - Retrofit existing chlorine contact building

DESCRIPTION	QUANTITY No. UNITS	QUANTITY UNIT MEASURE	MATERIAL PER UNIT	MATERIAL TOTAL	CD Installation	$3,000/CD	COMMENTS
Install new equipment							
50-100 HP Pumps	2.0	EA	$ 40,000.00	$ 80,000.00	15.0	$ 45,000.00	
New 10" HDPE forcemain piping	60.0	FT	$ 50.00	$ 3,000.00	2.0	$ 6,000.00	
New 8" DIP discharge piping	20.0	FT	$ 200.00	$ 4,000.00	2.0	$ 6,000.00	
Mechanical Fittings	4.0	EA	$ 2,000.00	$ 8,000.00	1.0	$ 3,000.00	
Gate Valves	3.0	EA	$ 2,000.00	$ 6,000.00	1.0	$ 3,000.00	
Check Valves	2.0	EA	$ 2,000.00	$ 4,000.00	1.0	$ 3,000.00	
Roadway Valve Box	1.0	EA	$ 2,000.00	$ 2,000.00	1.0	$ 3,000.00	
Demolition/Removal of Old Equipment	1.0	LS	$ 5,000.00	$ 5,000.00	5.0	$ 15,000.00	
Moving Systems and Panels to Adjacent Room	1.0	LS	$ 2,000.00	$ 2,000.00	5.0	$ 15,000.00	
SUBTOTAL				$114,000.00		$99,000.00	**$213,000.00**

ALTERNATIVE 2 - New Pump Station

DESCRIPTION	QUANTITY No. UNITS	QUANTITY UNIT MEASURE	MATERIAL PER UNIT	MATERIAL TOTAL	CD Installation	$3,000/CD	COMMENTS
Install new equipment							
Subcontractor Quote	1.0	LS	$ 225,000.00	$ 225,000.00	15.0	$ 45,000.00	
						$ -	
SUBTOTAL				$225,000.00		$45,000.00	**$270,000.00**

ALTERNATIVE 3 - Retrofit existing chlorine contact tank

DESCRIPTION	QUANTITY No. UNITS	QUANTITY UNIT MEASURE	MATERIAL PER UNIT	MATERIAL TOTAL	CD Installation	$3,000/CD	COMMENTS
Install new equipment							
50-100 HP Pumps	2.0	EA	$ 40,000.00	$ 80,000.00	15.0	$ 45,000.00	
New 8" DIP discharge piping	20.0	FT	$ 200.00	$ 4,000.00	2.0	$ 6,000.00	
New 10" HDPE discharge piping	60.0	FT	$ 50.00	$ 3,000.00	2.0	$ 6,000.00	
Mechanical Fittings	4.0	EA	$ 2,000.00	$ 8,000.00	1.0	$ 3,000.00	
Gate Valves	3.0	EA	$ 2,000.00	$ 6,000.00	1.0	$ 3,000.00	
Check Valves	2.0	EA	$ 2,000.00	$ 4,000.00	1.0	$ 3,000.00	
Roadway Valve Box	1.0	EA	$ 2,000.00	$ 2,000.00	1.0	$ 3,000.00	
Demolition/Removal of Old Equipment	1.0	LS	$ 5,000.00	$ 5,000.00	2.0	$ 6,000.00	Only Demo half of what Alt 1 is
Moving Systems and Panels to Adjacent Room	1.0	LS	$ 2,000.00	$ 2,000.00	2.0	$ 6,000.00	Only Move half of what Alt 1 is
SUBTOTAL				$114,000.00		$81,000.00	**$195,000.00**

Electrical CD=Crew Day

ALTERNATIVE 1 - Retrofit existing chlorine contact building

DESCRIPTION	QUANTITY No. UNITS	QUANTITY UNIT MEASURE	MATERIAL PER UNIT	MATERIAL TOTAL	CD Installation	$3,000/CD	COMMENTS
Install new equipment							
New Service	1.0	LS	$ 50,000.00	$ 50,000.00	5.0	$ 15,000.00	
50-100HP Conduit Wire	1.0	LS	$ 40,000.00	$ 40,000.00	2.0	$ 6,000.00	
460 Volt Wiring to Pumps	1.0	LS	$ 7,000.00	$ 7,000.00	4.0	$ 12,000.00	
Motor Control Center Load Wiring	1.0	LS	$ 30,000.00	$ 30,000.00	5.0	$ 15,000.00	
Motor Control Center	1.0	LS	$ 75,000.00	$ 75,000.00	5.0	$ 15,000.00	
Generator	1.0	EA	$ 100,000.00	$ 100,000.00	2.0	$ 6,000.00	
Local Disconnects	3.0	EA	$ 2,500.00	$ 7,500.00	4.0	$ 12,000.00	
Wiring to PLC	1.0	LS	$ 20,000.00	$ 20,000.00	2.0	$ 6,000.00	
SUBTOTAL				$329,500.00		$87,000.00	$416,500.00

ALTERNATIVE 2 - New Pump Station

DESCRIPTION	QUANTITY No. UNITS	QUANTITY UNIT MEASURE	MATERIAL PER UNIT	MATERIAL TOTAL	CD Installation	$3,000/CD	COMMENTS
Install new equipment							
New Service	1.0	LS	$ 50,000.00	$ 50,000.00	5.0	$ 15,000.00	
Motor Control Center	1.0	LS	$ 75,000.00	$ 75,000.00	4.0	$ 12,000.00	
Wiring to PLC	1.0	LS	$ 20,000.00	$ 20,000.00	4.0	$ 12,000.00	
Generator	1.0	LS	$ 100,000.00	$ 100,000.00		$ -	
		LS		$ -		$ -	
		LS		$ -		$ -	
		EA		$ -		$ -	
SUBTOTAL				$245,000.00		$39,000.00	$284,000.00

ALTERNATIVE 3 - Retrofit existing chlorine contact tank

DESCRIPTION	QUANTITY No. UNITS	QUANTITY UNIT MEASURE	MATERIAL PER UNIT	MATERIAL TOTAL	CD Installation	$3,000/CD	COMMENTS
Install new equipment							
New Service	1.0	LS	$ 50,000.00	$ 50,000.00	5.0	$ 15,000.00	
50-100HP Conduit Wire	1.0	LS	$ 60,000.00	$ 60,000.00	2.0	$ 6,000.00	
460 Volt Wiring to Pumps	1.0	LS	$ 15,000.00	$ 15,000.00	5.0	$ 15,000.00	
Motor Control Center Load Wiring	1.0	LS	$ 40,000.00	$ 40,000.00	5.0	$ 15,000.00	
Generator	1.0	EA	$ 100,000.00	$ 100,000.00	2.0	$ 6,000.00	
Motor Control Center	1.0	LS	$ 75,000.00	$ 75,000.00	5.0	$ 15,000.00	
Local Disconnects	3.0	EA	$ 2,500.00	$ 7,500.00	4.0	$ 12,000.00	
Wiring to PLC and Blower Room	1.0	LS	$ 20,000.00	$ 20,000.00	2.0	$ 6,000.00	
SUBTOTAL				$367,500.00		$90,000.00	$457,500.00

Structural CD=Crew Day

ALTERNATIVE 1 - Retrofit existing chlorine contact building

DESCRIPTION	QUANTITY No. UNITS	QUANTITY UNIT MEASURE	MATERIAL PER UNIT	MATERIAL TOTAL	CD Installation	$3,000/CD	COMMENTS
Install new equipment							
Move East Wall, Modify Roof	1.0	LS	$ 50,000.00	$ 50,000.00	25.0	$ 75,000.00	
Misc. Wall Repairs	1.0	LS	$ 20,000.00	$ 20,000.00	4.0	$ 12,000.00	
Wet Well Modifications/Baffle Wall	1.0	LS	$ 10,000.00	$ 10,000.00	10.0	$ 30,000.00	
Painting	1.0	LS	$ 1,000.00	$ 1,000.00	3.0	$ 9,000.00	
Extend Slab to Wall	1.0	LS	$ 10,000.00	$ 10,000.00	10.0	$ 30,000.00	
Roof Hatches for Pumps and Valve Box	1.0	EA	$ 20,000.00	$ 20,000.00	10.0	$ 30,000.00	
Raise Walls of Chlorine Contact tank	1.0	LS	$ 50,000.00	$ 50,000.00	15.0	$ 45,000.00	
SUBTOTAL				$111,000.00		$186,000.00	$297,000.00

ALTERNATIVE 2 - New Pump Station

DESCRIPTION	QUANTITY No. UNITS	QUANTITY UNIT MEASURE	MATERIAL PER UNIT	MATERIAL TOTAL	CD Installation	$3,000/CD	COMMENTS
Install new equipment							
8' Dia. 13' Deep Wet Well	1.0	LS	$ 40,000.00	$ 40,000.00	15.0	$ 45,000.00	
SUBTOTAL				$40,000.00		$45,000.00	$85,000.00

ALTERNATIVE 3 - Retrofit existing chlorine contact tank

DESCRIPTION	QUANTITY No. UNITS	QUANTITY UNIT MEASURE	MATERIAL PER UNIT	MATERIAL TOTAL	CD Installation	$3,000/CD	COMMENTS
Install new equipment							
Raise Walls of Chlorine Contact Tank	1.0	LS	$ 50,000.00	$ 50,000.00	15.0	$ 45,000.00	
Foundation work	1.0	LS	$ 15,000.00	$ 15,000.00	5.0	$ 15,000.00	
SUBTOTAL				$65,000.00		$60,000.00	$125,000.00

Site Improvements CD=Crew Day

ALTERNATIVE 1 - Retrofit existing chlorine contact building

DESCRIPTION	QUANTITY No. UNITS	QUANTITY UNIT MEASURE	MATERIAL PER UNIT	MATERIAL TOTAL	CD Installation	$3,000/CD	COMMENTS
Install new equipment							
New 10" HDPE Force Main and Trench Work	60.0	LF	$ 450.00	$ 27,000.00	10.0	$ 30,000.00	
Landscaping	1.0	LS	$ 4,000.00	$ 4,000.00	4.0	$ 12,000.00	
SUBTOTAL				$31,000.00		$42,000.00	$73,000.00

ALTERNATIVE 2 - New Pump Station

DESCRIPTION	QUANTITY No. UNITS	QUANTITY UNIT MEASURE	MATERIAL PER UNIT	MATERIAL TOTAL	CD Installation	$3,000/CD	COMMENTS
Install new equipment							
New 10" HDPE Force Main and Trench Work	60.0	LF	$ 300.00	$ 18,000.00	5.0	$ 15,000.00	
Excavate	150.0	CY	$ 250.00	$ 37,500.00	10.0	$ 30,000.00	
Grade	150.0	SY	$ 150.00	$ 22,500.00	5.0	$ 15,000.00	
Dewatering	1.0	LS	$ 20,000.00	$ 20,000.00	5.0	$ 15,000.00	
Stormwater Management System	1.0	LS	$ 20,000.00	$ 20,000.00	5.0	$ 15,000.00	
SUBTOTAL				$118,000.00		$90,000.00	$208,000.00

ALTERNATIVE 3 - Retrofit existing chlorine contact tank

DESCRIPTION	QUANTITY No. UNITS	QUANTITY UNIT MEASURE	MATERIAL PER UNIT	MATERIAL TOTAL	CD Installation	$3,000/CD	COMMENTS
Install new equipment							
New 10" HDPE Force Main and Trench Work	60.0	LF	$ 500.00	$ 30,000.00	10.0	$ 30,000.00	
Landscaping	1.0	LS	$ 4,000.00	$ 4,000.00	4.0	$ 12,000.00	
SUBTOTAL				$34,000.00		$42,000.00	$76,000.00

Instrumentation and Controls CD=Crew Day

ALTERNATIVE 1 - Retrofit existing chlorine contact building

DESCRIPTION	QUANTITY No. UNITS	QUANTITY UNIT MEASURE	MATERIAL PER UNIT	MATERIAL TOTAL	CD Installation	$3,000/CD	COMMENTS
Install new equipment							
Pressure Transmitter	1.0	EA.	$ 1,500.00	$ 1,500.00	1.0	$ 3,000.00	
Pressure Gauge	1.0	EA.	$ 500.00	$ 500.00	1.0	$ 3,000.00	
Pressure Transducer Level Meter	1.0	EA	$ 1,500.00	$ 1,500.00	1.0	$ 3,000.00	
New Flow Meter	1.0	EA.	$ 5,000.00	$ 5,000.00	1.0	$ 3,000.00	
SCADA and Integration	1.0	LS	$ 25,000.00	$ 25,000.00	5.0	$ 15,000.00	
Instrumentation Wiring and Panels	1.0	LS	$ 15,000.00	$ 15,000.00	5.0	$ 15,000.00	
Hard-wired floats	1.0	EA	$ 1,000.00	$ 1,000.00	1.0	$ 3,000.00	
SUBTOTAL				$49,500.00		$45,000.00	$94,500.00

ALTERNATIVE 2 - New Pump Station

DESCRIPTION	QUANTITY No. UNITS	QUANTITY UNIT MEASURE	MATERIAL PER UNIT	MATERIAL TOTAL	CD Installation	$3,000/CD	COMMENTS
Install new equipment							
Hard-wired floats	1.0	EA.	$ 1,000.00	$ 1,000.00	1.0	$ 3,000.00	
SUBTOTAL				$1,000.00		$3,000.00	$4,000.00

ALTERNATIVE 3 - Retrofit existing chlorine contact tank

DESCRIPTION	QUANTITY No. UNITS	QUANTITY UNIT MEASURE	MATERIAL PER UNIT	MATERIAL TOTAL	CD Installation	$3,000/CD	COMMENTS
Install new equipment							
Pressure Transmitter	1.0	EA.	$ 1,500.00	$ 1,500.00	1.0	$ 3,000.00	
Pressure Gauge	1.0	EA.	$ 500.00	$ 500.00	1.0	$ 3,000.00	
Pressure Transducer Level Meter	1.0	EA	$ 1,500.00	$ 1,500.00	1.0	$ 3,000.00	
New Flow Meter	1.0	EA.	$ 5,000.00	$ 5,000.00	1.0	$ 3,000.00	
SCADA and Integration	1.0	LS	$ 25,000.00	$ 25,000.00	5.0	$ 15,000.00	
Instrumentation Wiring and Panels	1.0	LS	$ 15,000.00	$ 15,000.00	5.0	$ 15,000.00	
Hard-wired floats	1.0	EA	$ 1,000.00	$ 1,000.00	1.0	$ 3,000.00	
SUBTOTAL				$49,500.00		$45,000.00	$94,500.00